FRODO 300

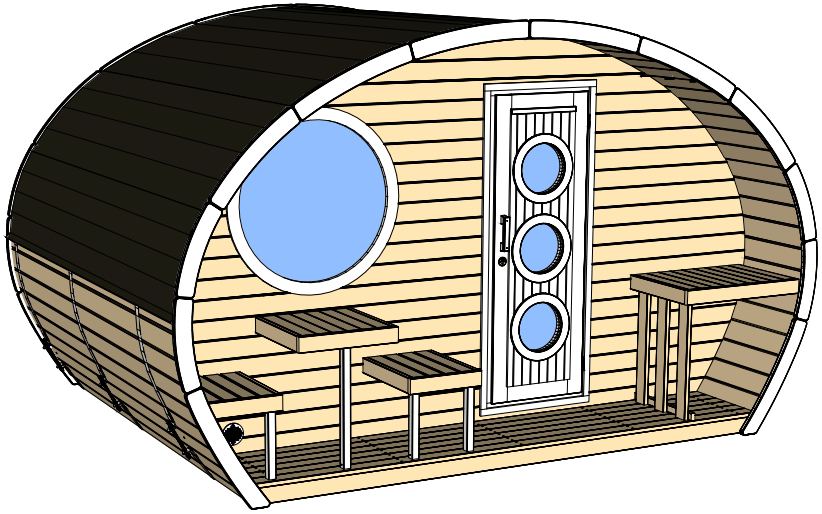

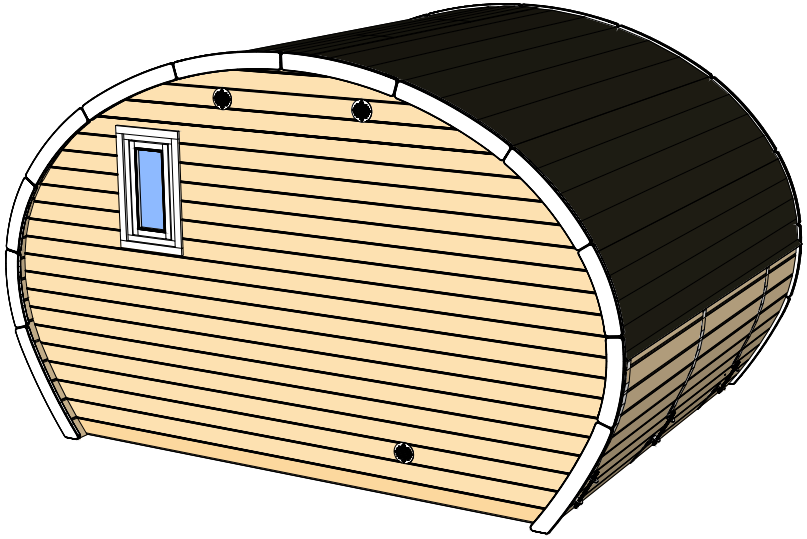

(FR101)

FRODO 300 Details list nr.1

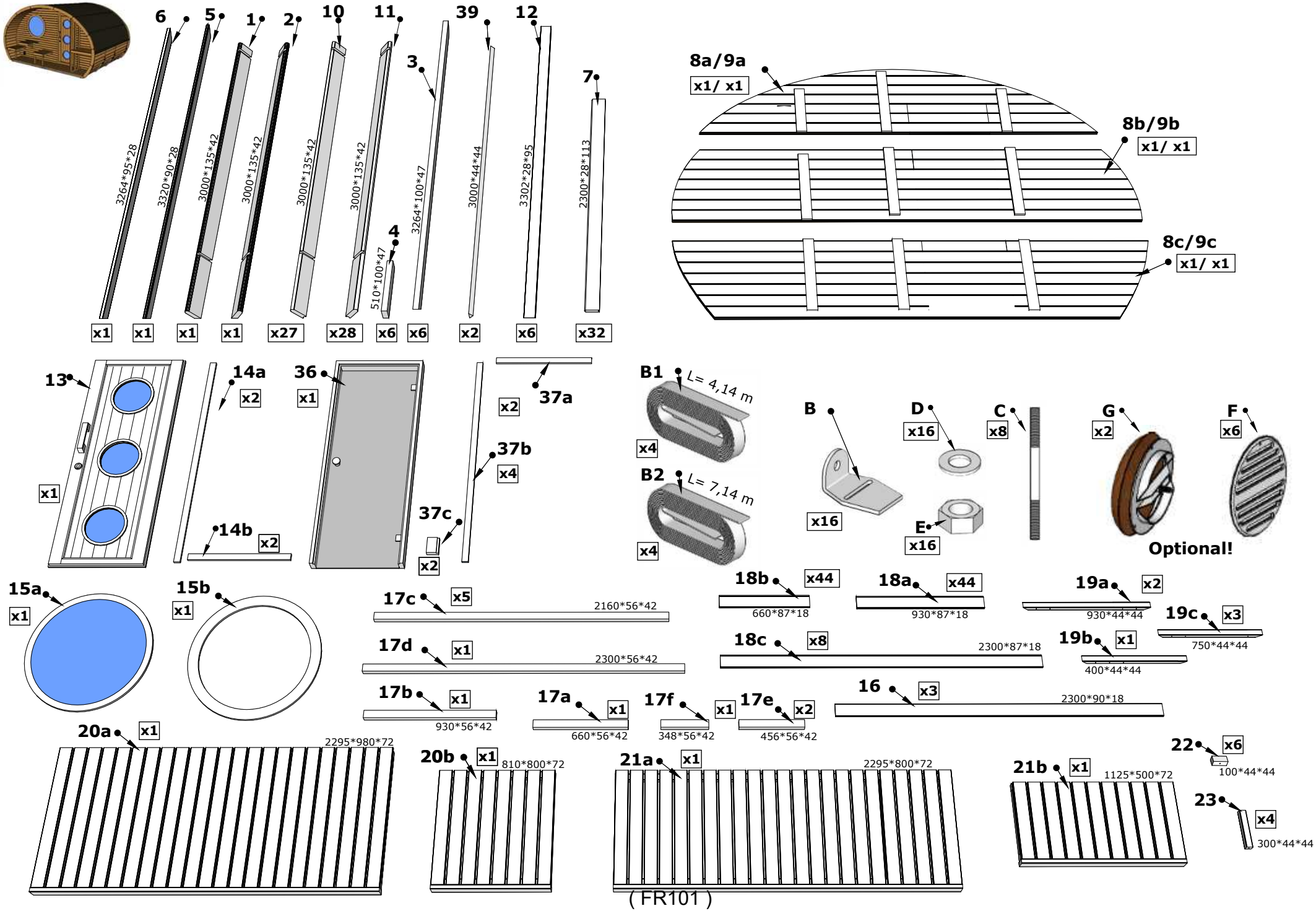

(FR101)

FRODO 300 Details list nr.2

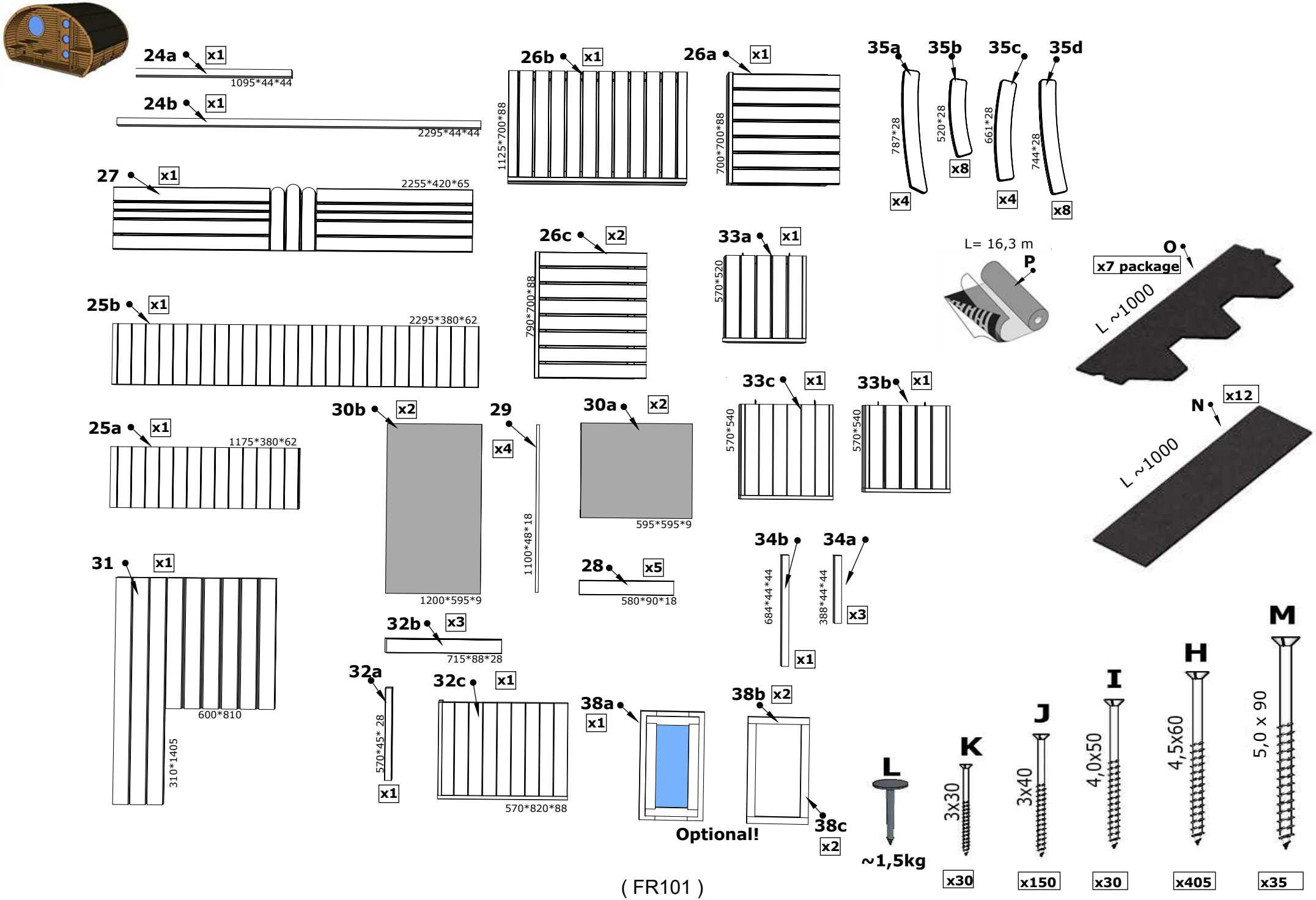

FRODO 300

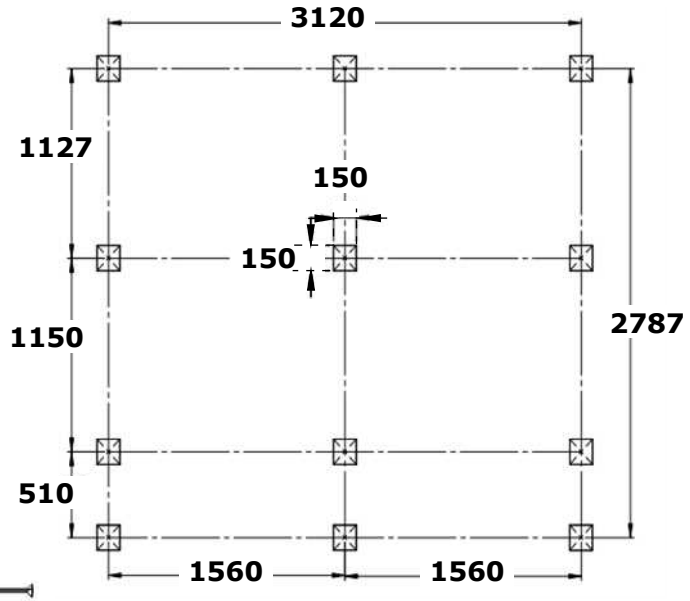

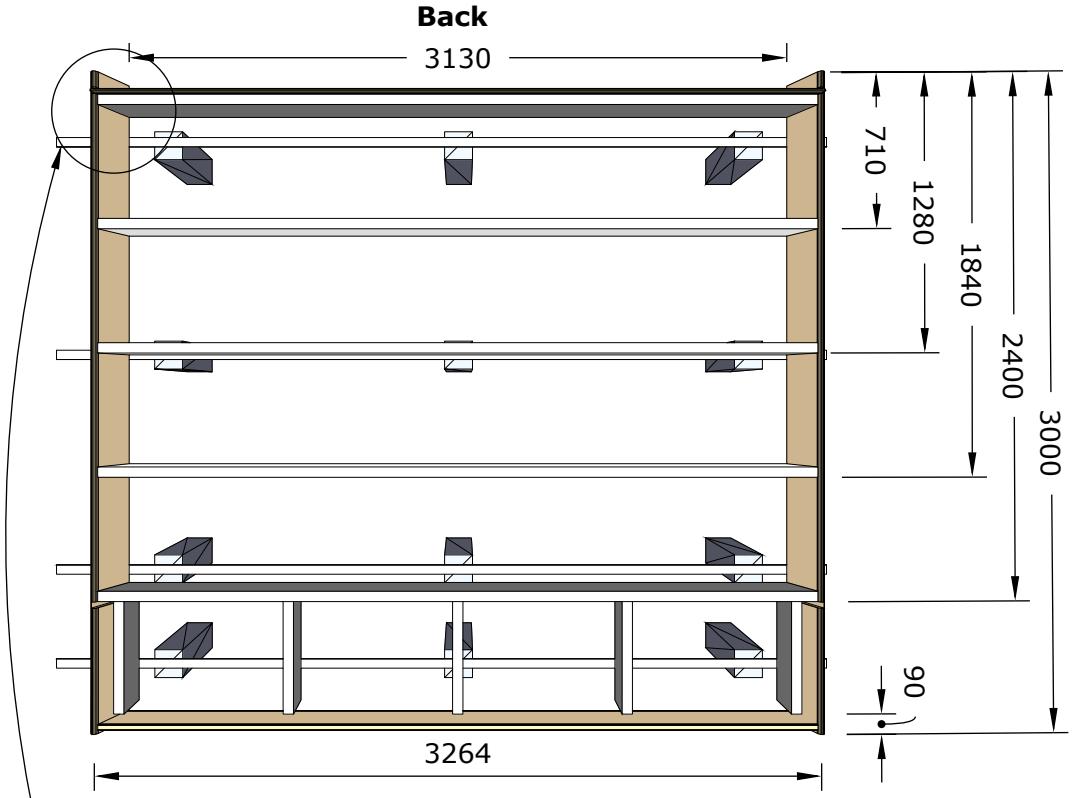

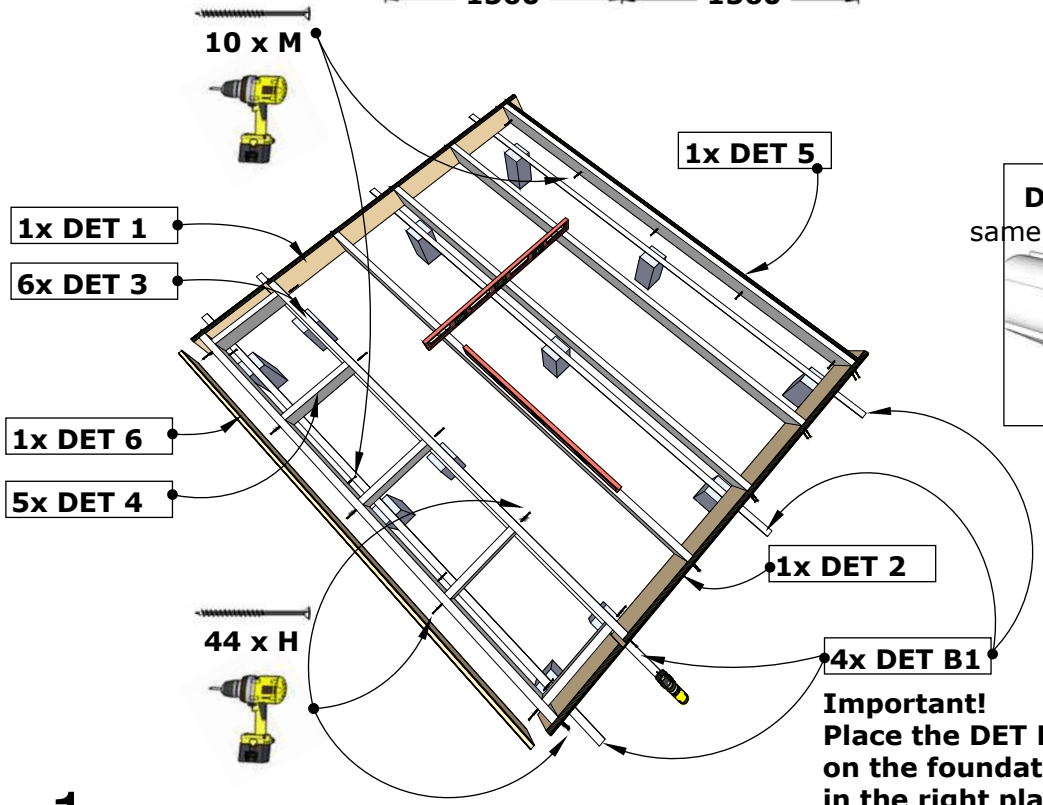

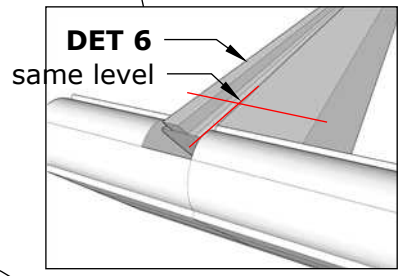

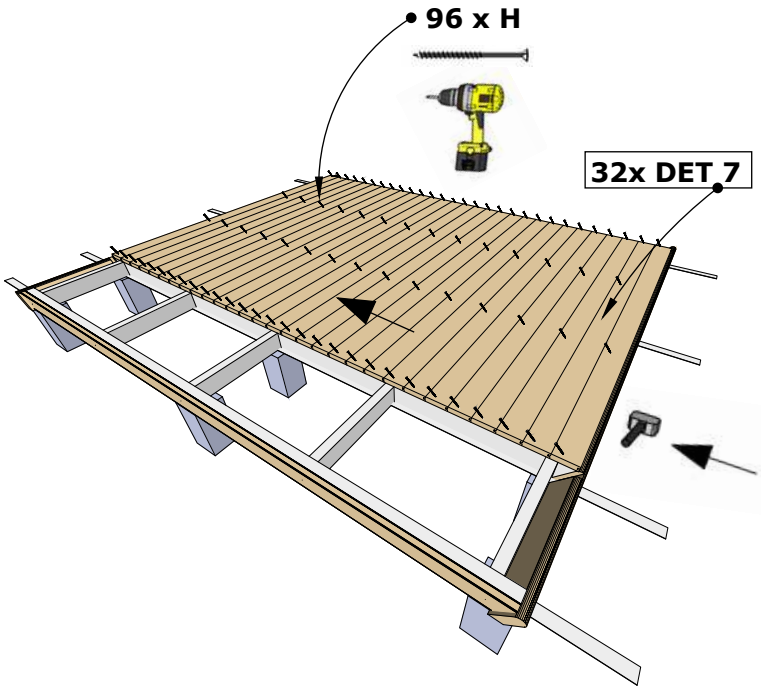

Important!
Place the DET B1
on the foundation
in the right place
before assembling the sauna!

1.

FRODO 300

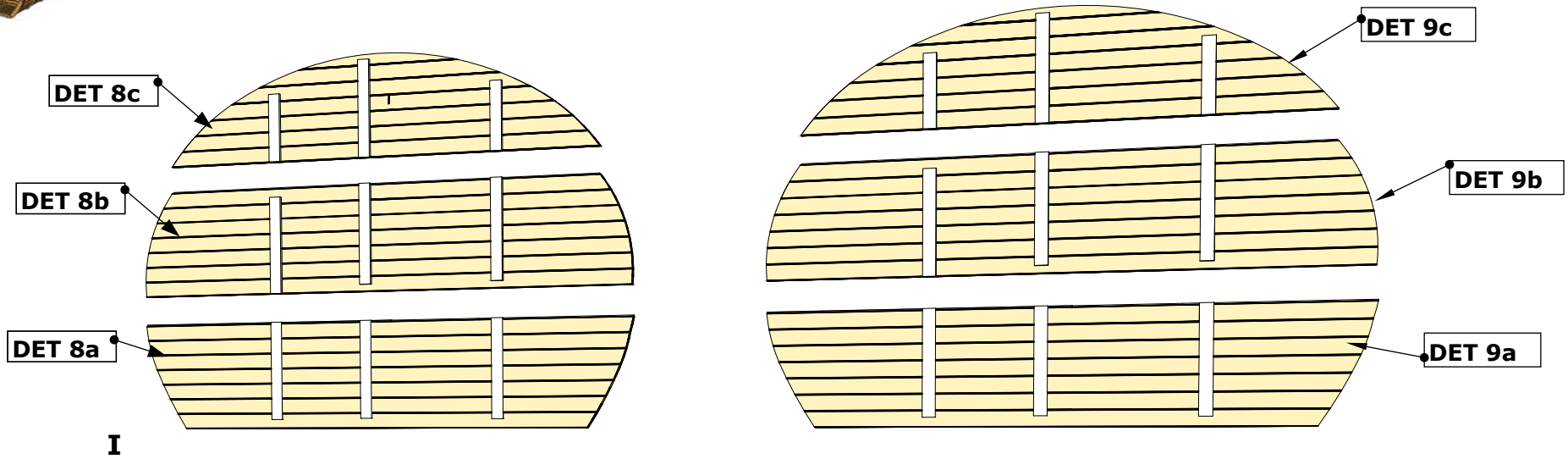

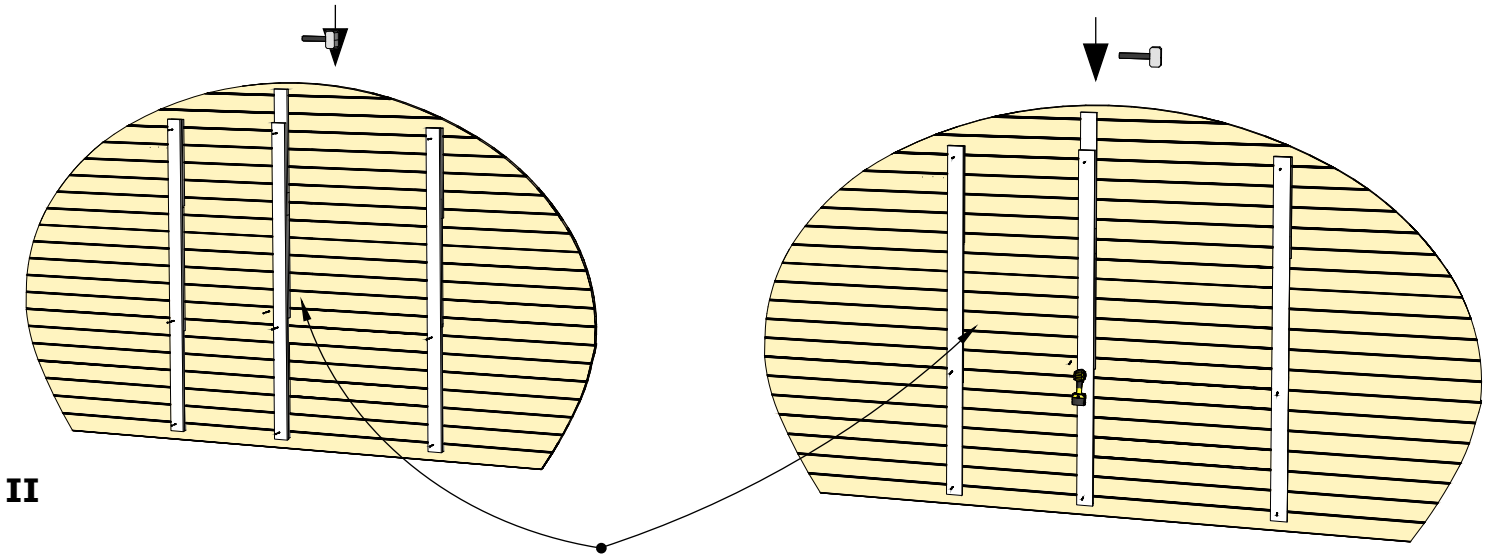

12 x I

NB! Cut a few boards from the base to temporarily support and secure the walls!!

2.

FRODO 300

Wall and floor midpoint

mm=mm

NB! Cut some boards from pallet, to support and fix walls if necessary!

DET 9a/9b/9C

DET 8a/8b/8C

mm=mm

Use DET 10/ DET 11 temporarily if necessary

4 x H

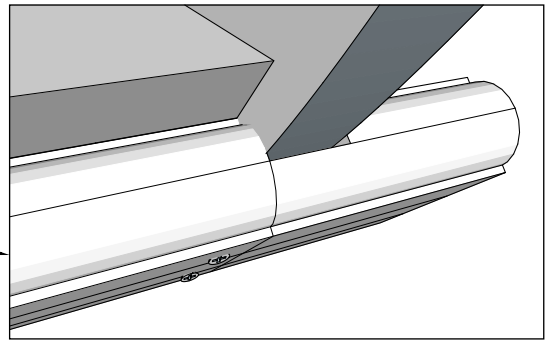

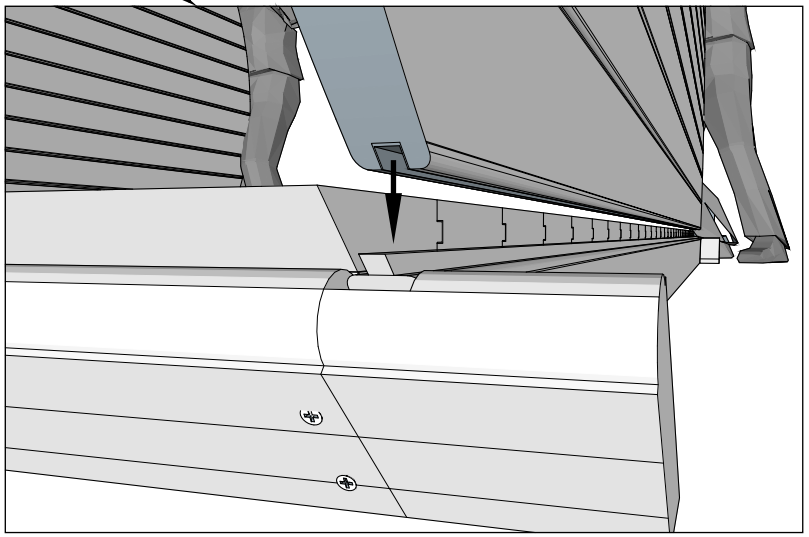

3.

FRODO 300

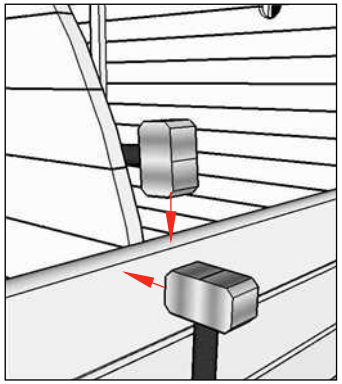

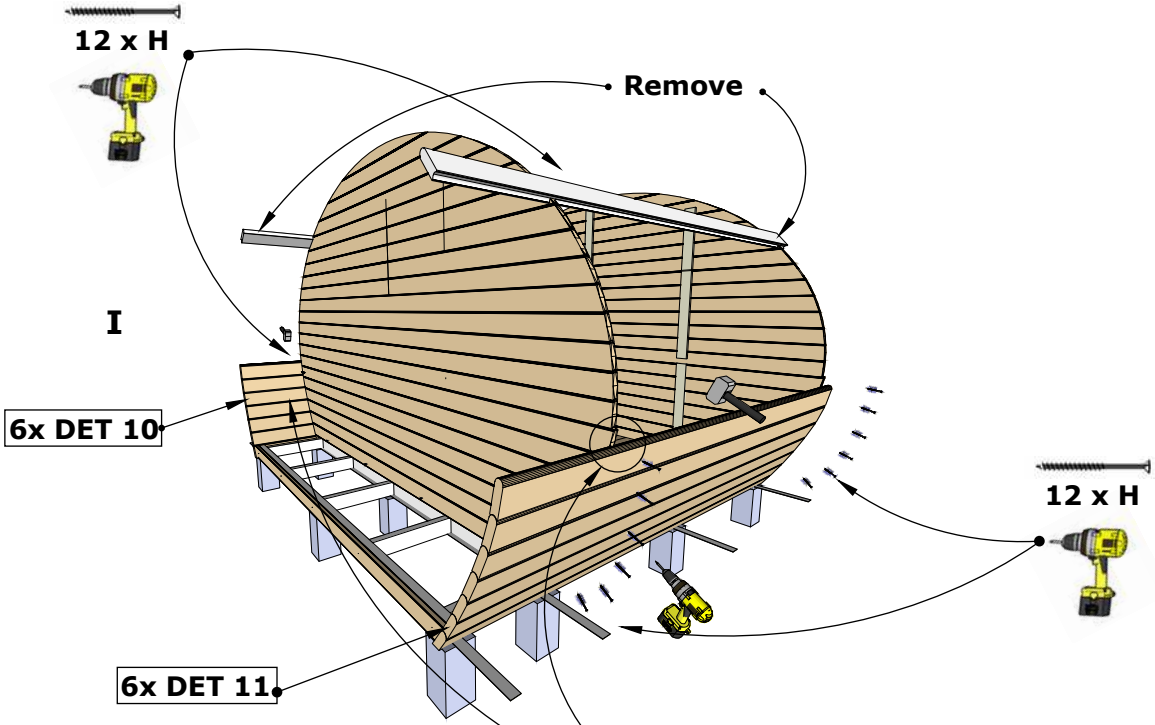

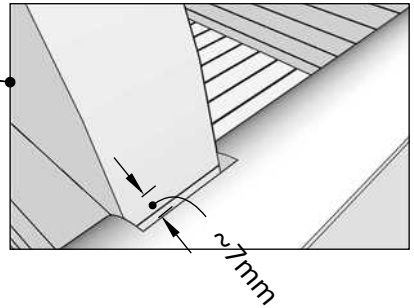

NB! Don`t leave space, if using thermal wood!!!

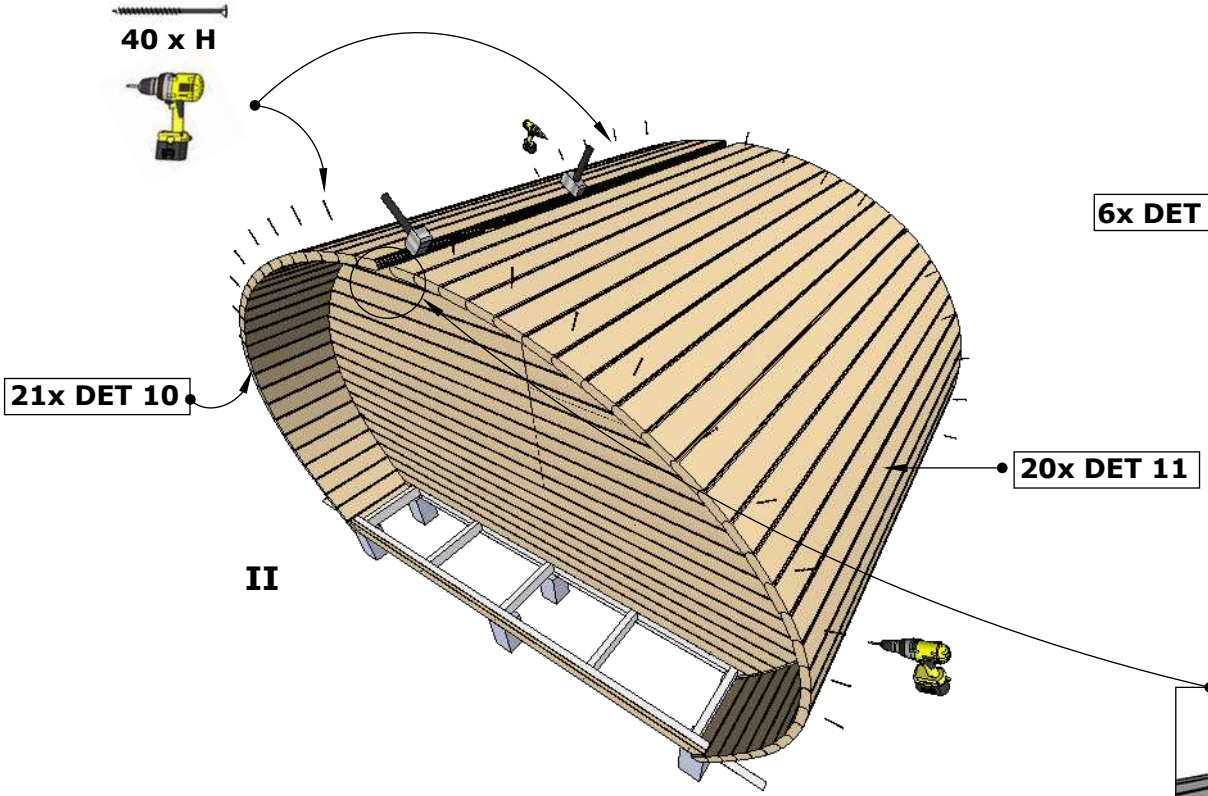

See Page 4A

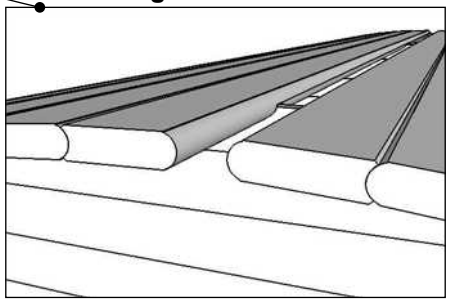

FRODO 300

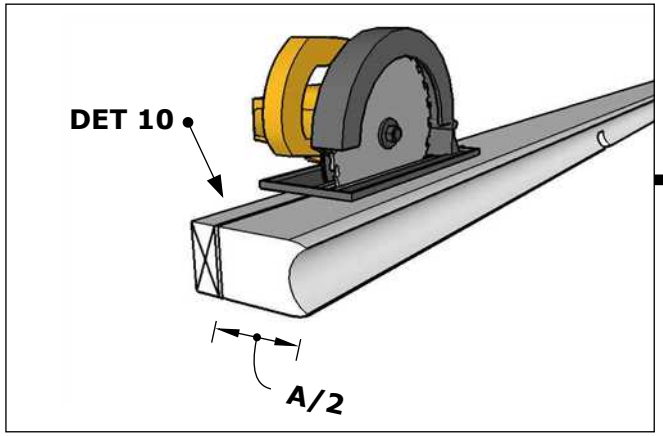
DET 10
A/2

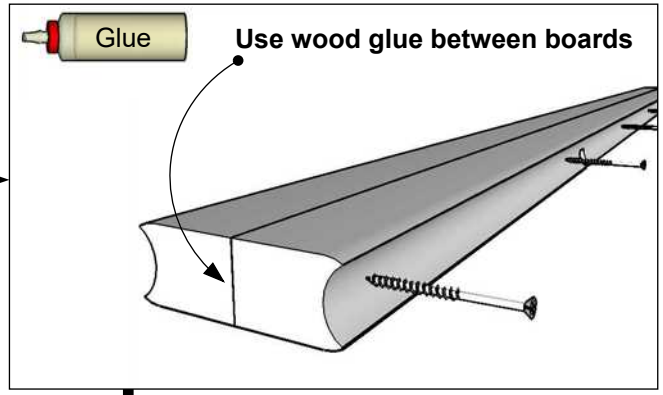
Glue
Use wood glue between boards

5 x H (M)

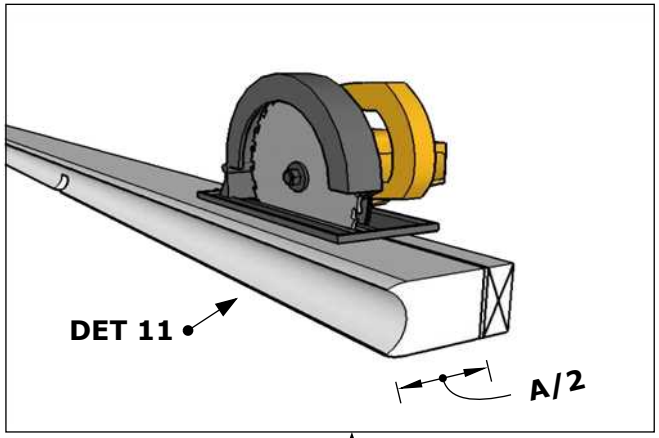
DET 11
A/2

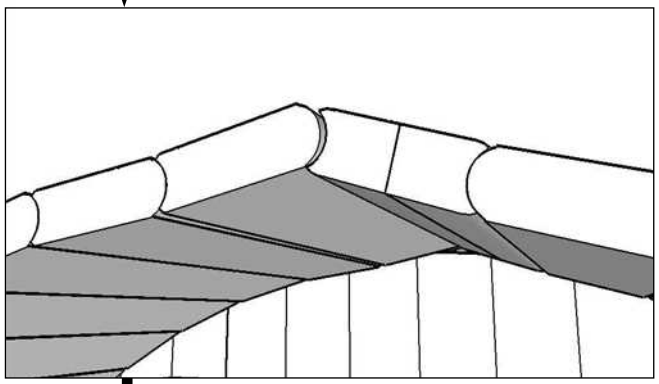

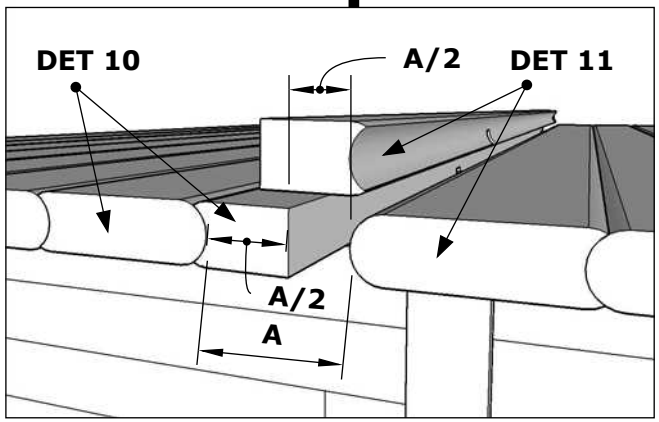
DET 10
A/2
DET 11
A/2
A

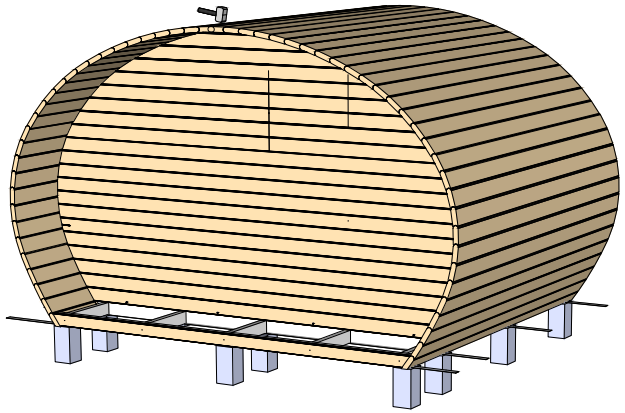

4A.

FRODO 300

8x DET C
16x DET D
16x DET E

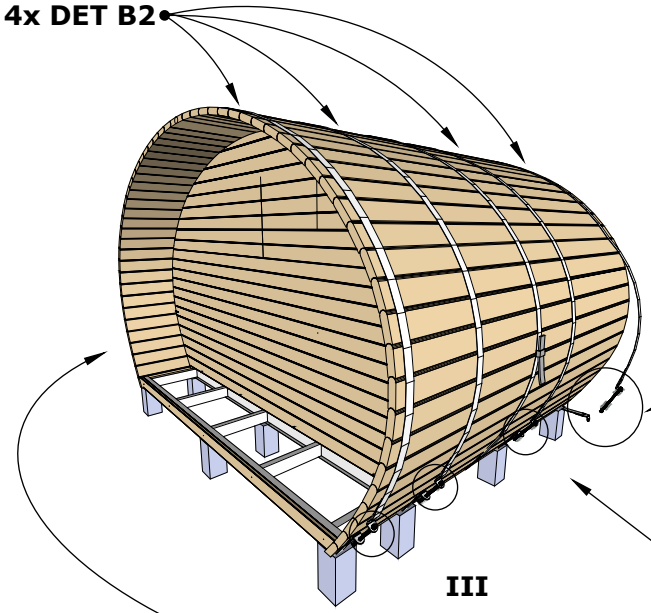

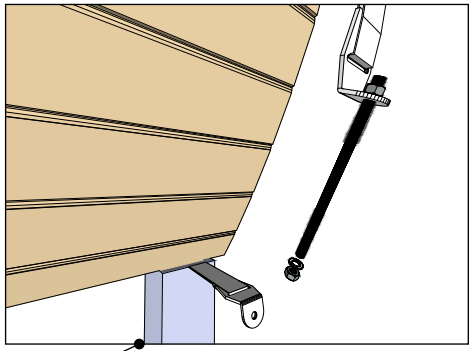

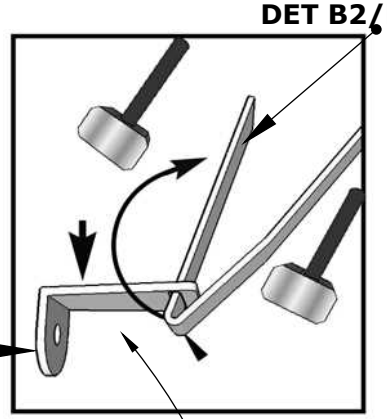

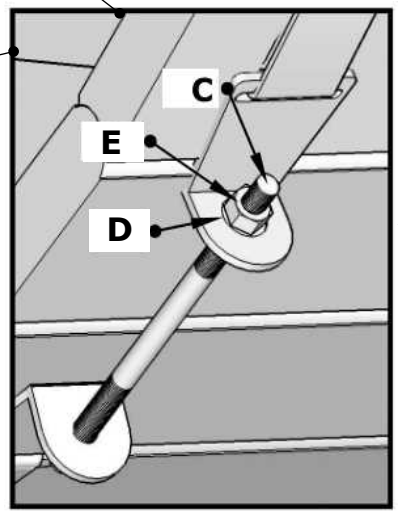

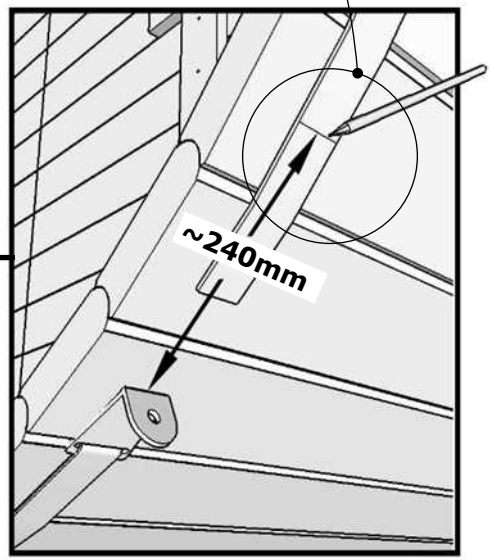

II
Remove all screws

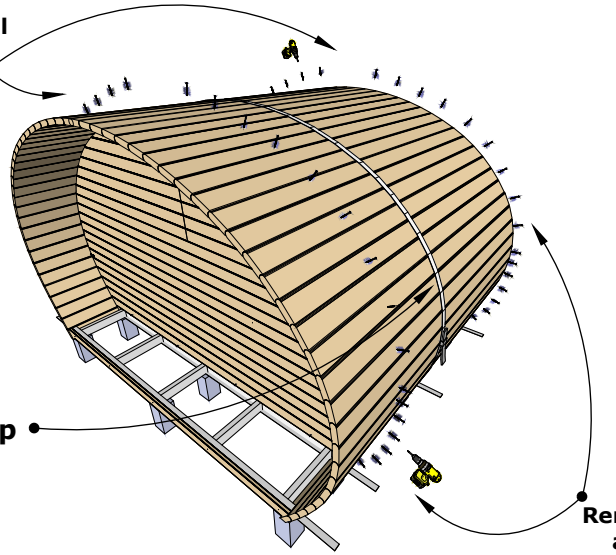

I
Use strap

Remove all screws and use them on further sauna installation

NB! Don´t remove screws if using thermal wood!

During assembly and retightening the threaded rods, use oil (Würth HPS 1400 or similar) to avoid "cold welding" and it is also easier tightening.

FRODO 300

Use waterlevel for installation.
Place door from inside.

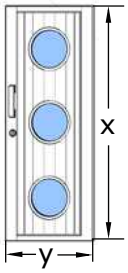

Place doors from inside.

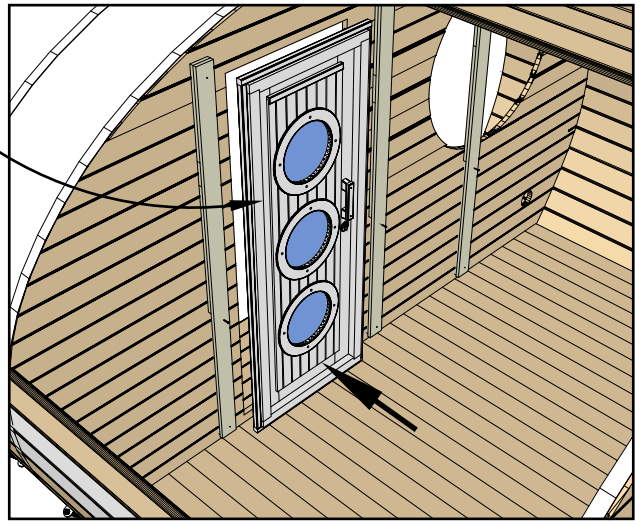

IV

Measure the door and add 10 mm to each side!
Mark openings and cut out.

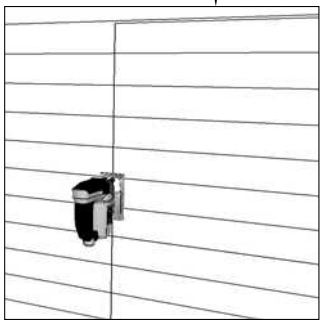

II

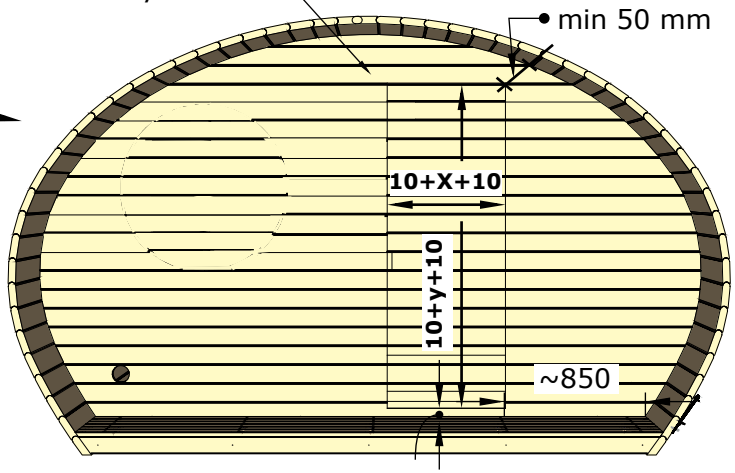

III

min.50 from floor!

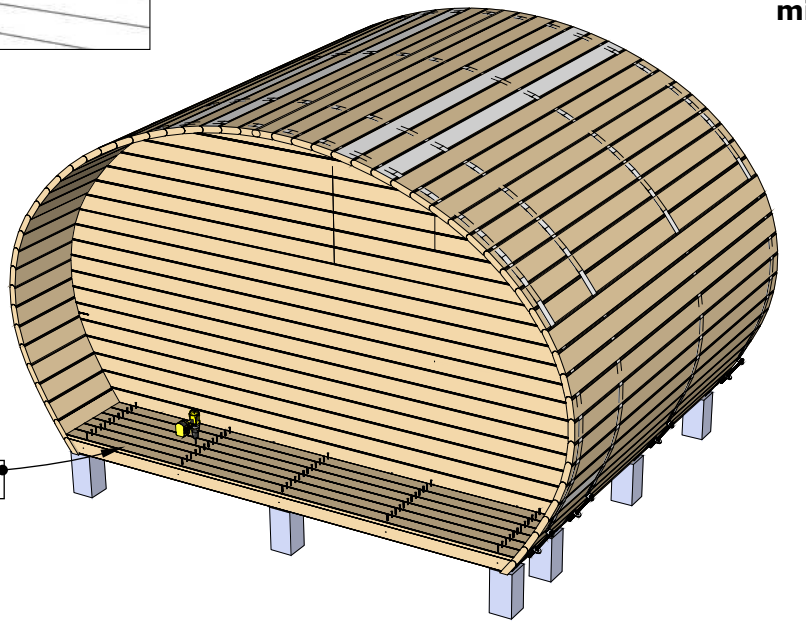

I

28 x H

6x DET 12

42 x J

18 x J

NB! Vertically fix screw in every board.

2x DET 14b

2x DET 14a

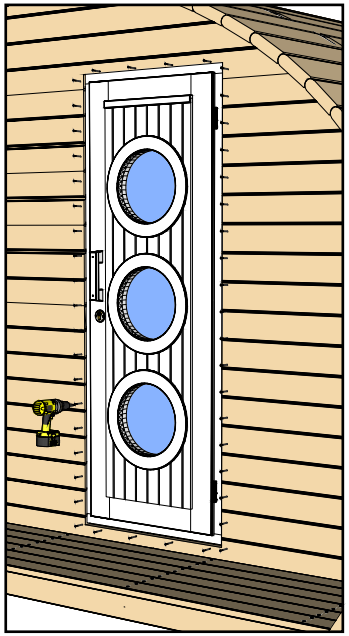

V

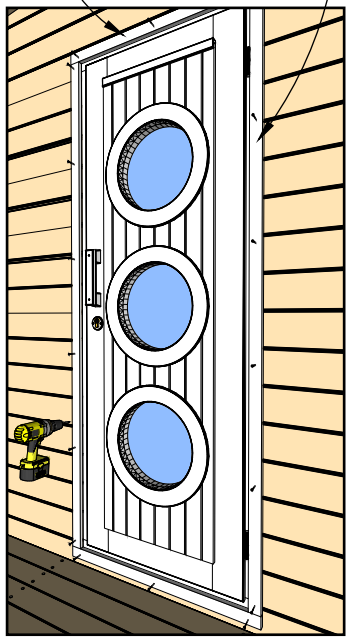

VI

FRODO 300

Use waterlevel for installation.
Place window from outside.

Measure the window and add 10 mm around!
Mark openings and cut out.

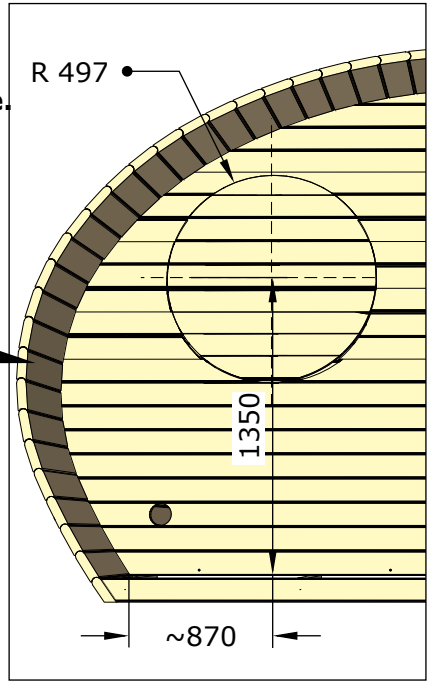

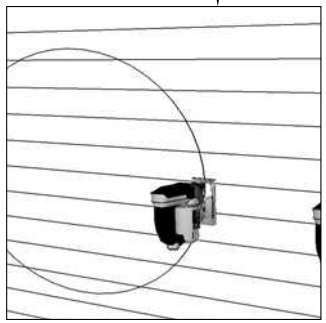

II

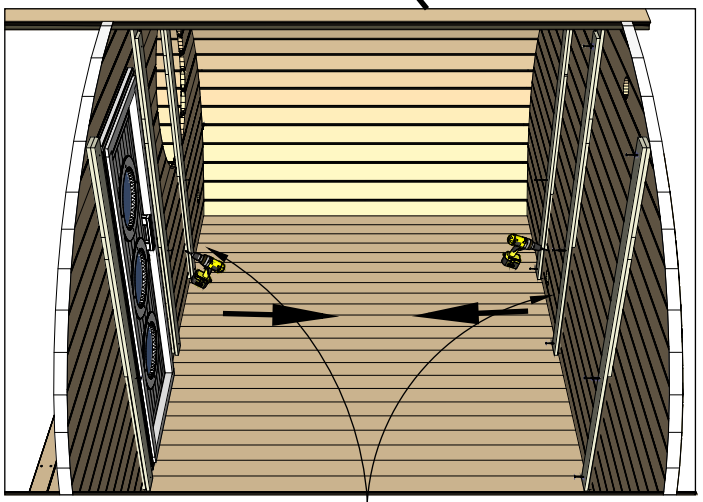

I

Remove all brackets

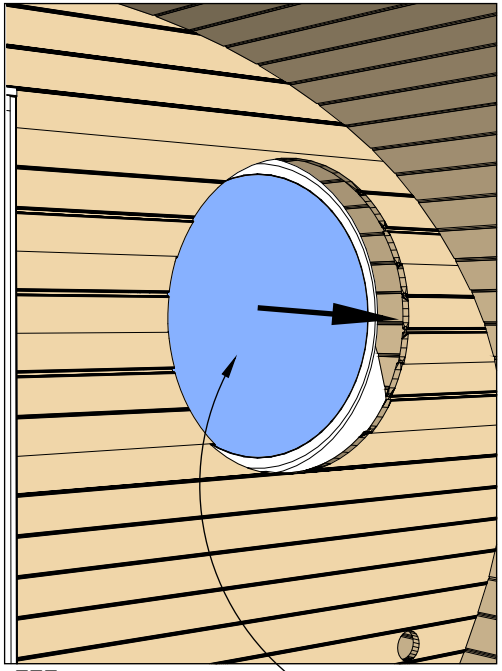

III

1x DET 15a

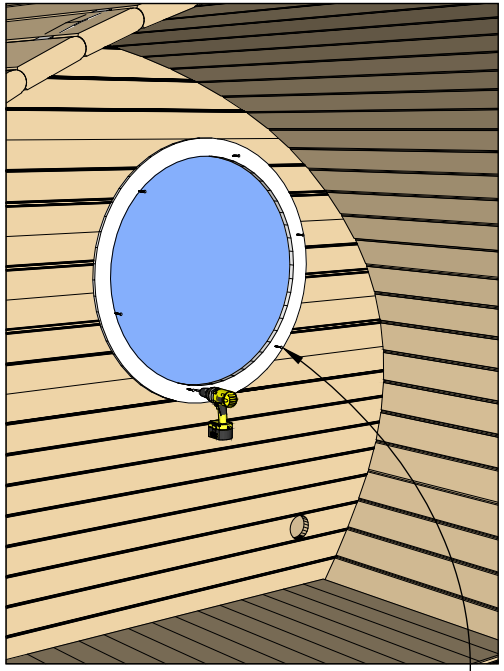

IV

1x DET 15b

6 x I

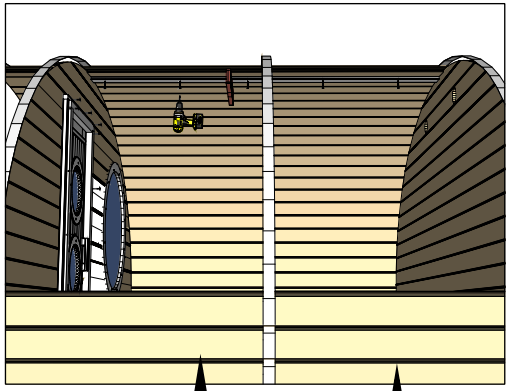

5 x I

Sauna midpoint

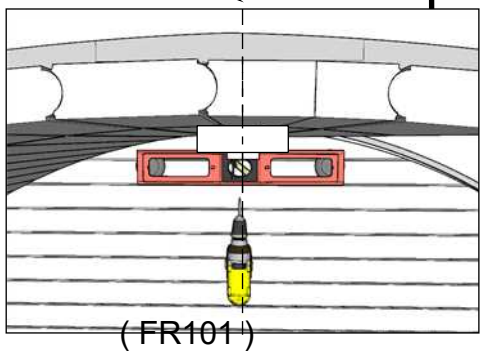

V

1x DET 16

7.

FRODO 300

II

1570

Make 1 holes
Ø110

Sauna
midpoint

2 x DET F

6 x K

Make 3 holes
Ø110

900

2 x DET G

4 x DET F

18 x K

I

Sauna
midpoint

700

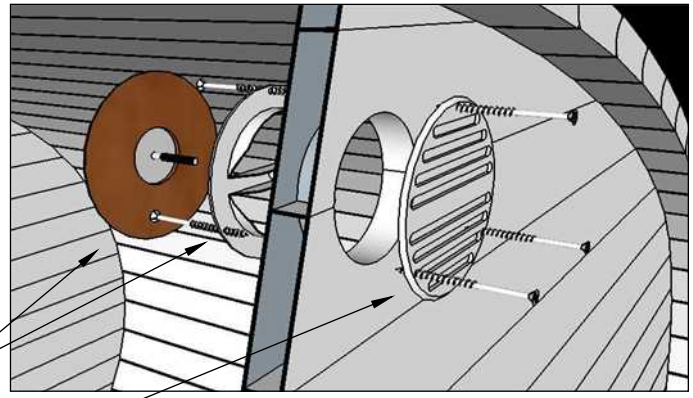

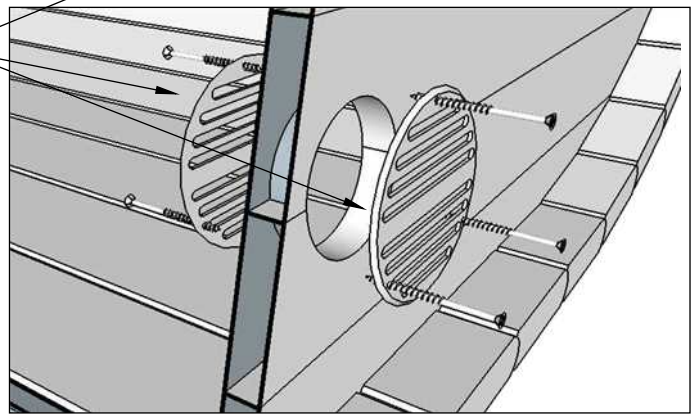

8.

FRODO 300

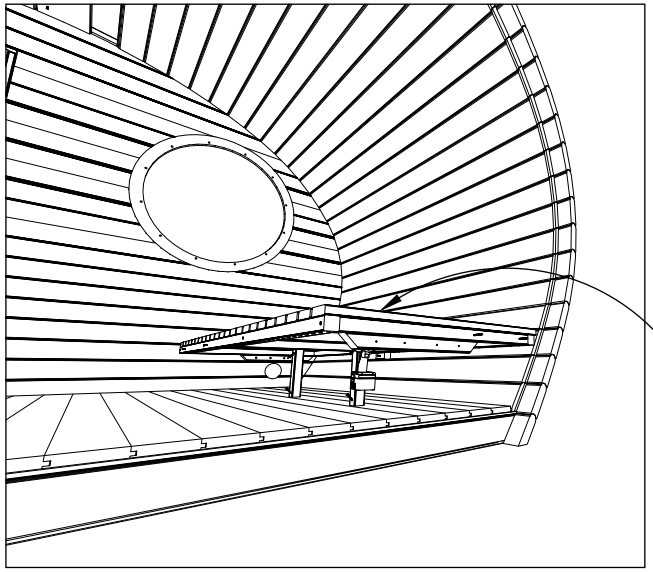

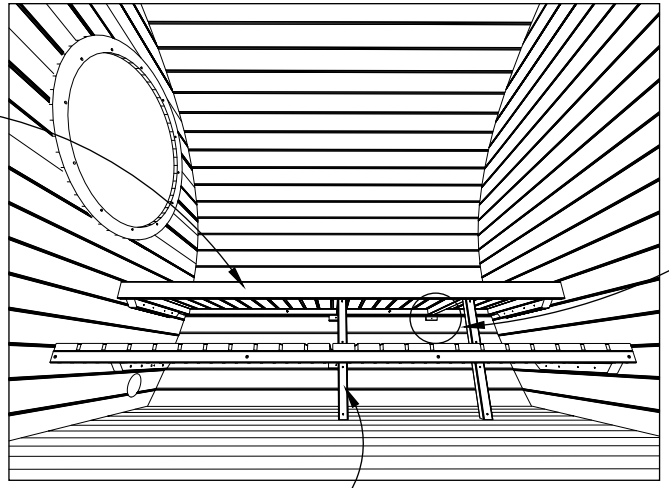

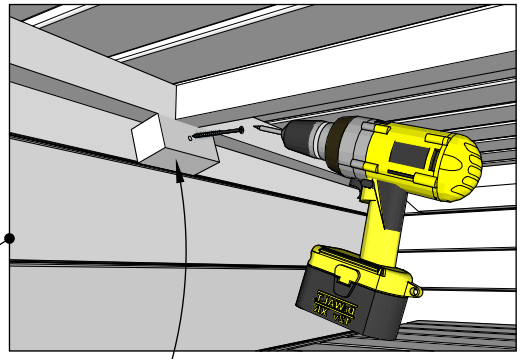

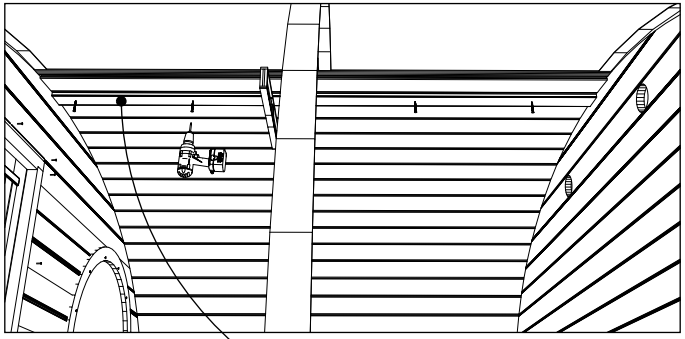

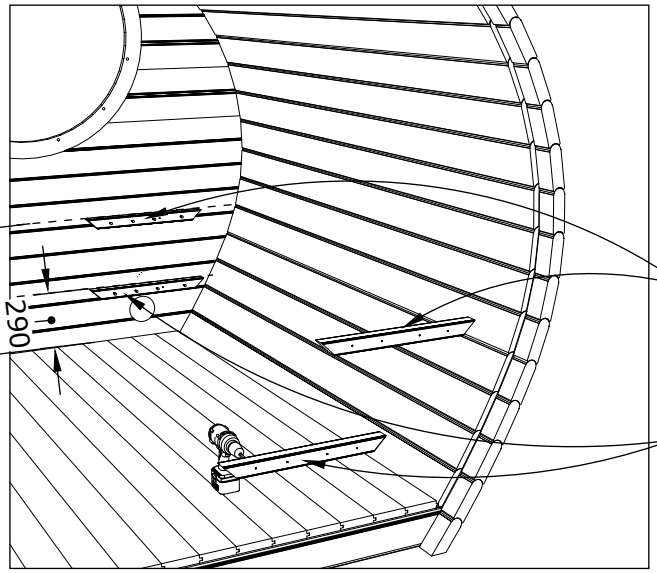

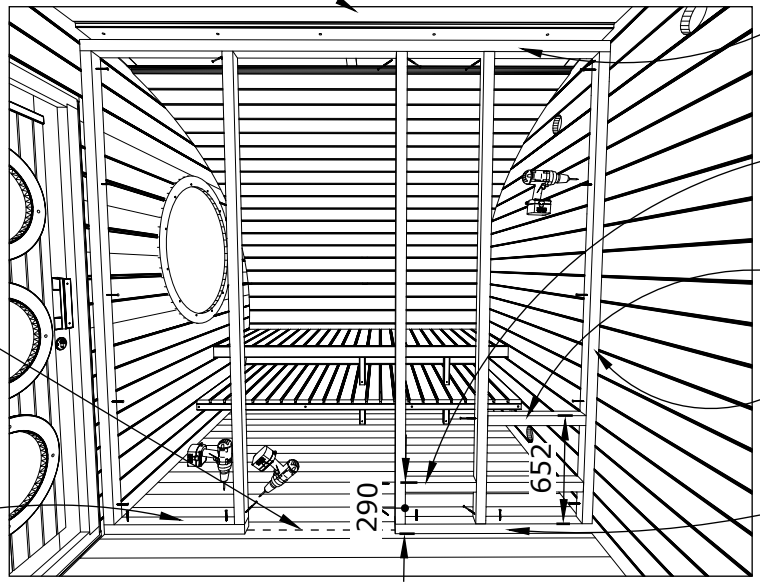

9.

(FR101)

FRODO 300

Measure the window and add 10 mm to each side! Mark openings and cut out.

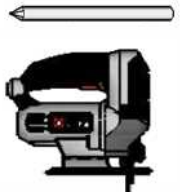

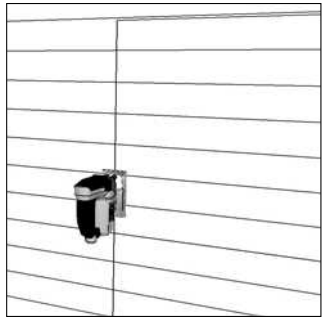

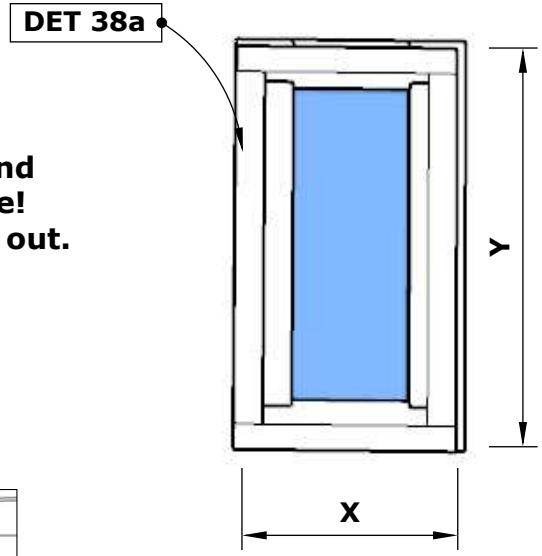

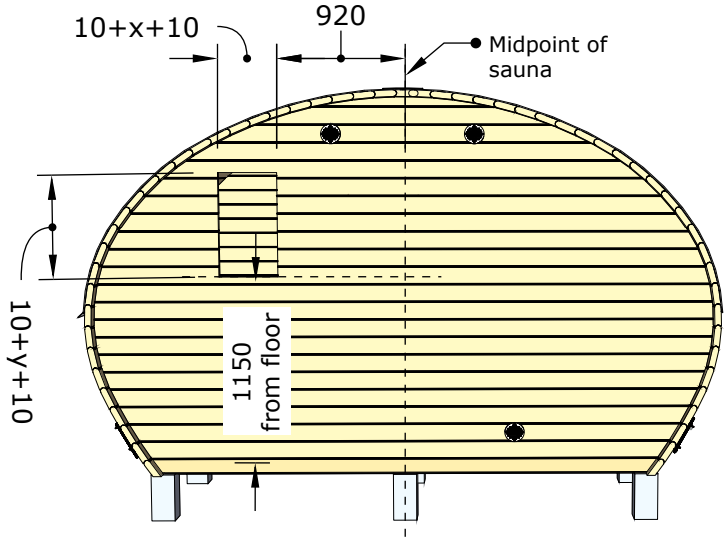

NB! Vertically fix screws in every board.

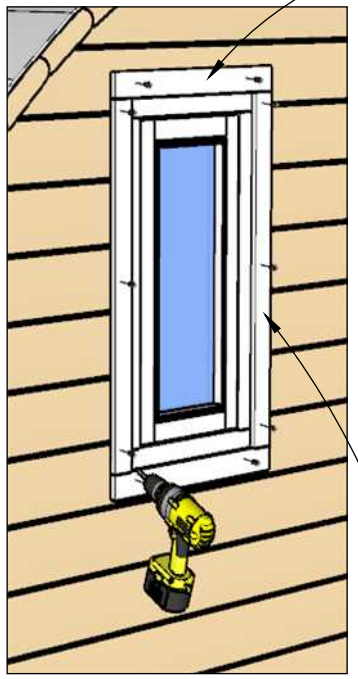

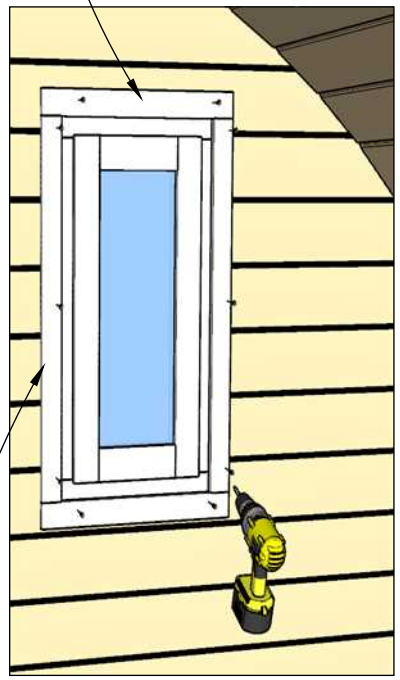

2xDET 38b

2xDET 38c

FRODO 300

1 x DET 19b

1 x DET 19c

8 x H

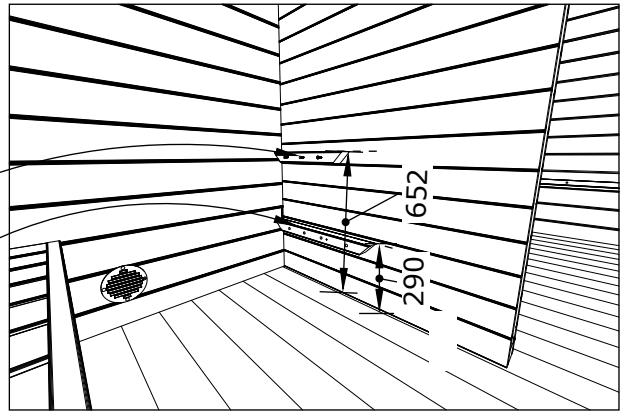

III

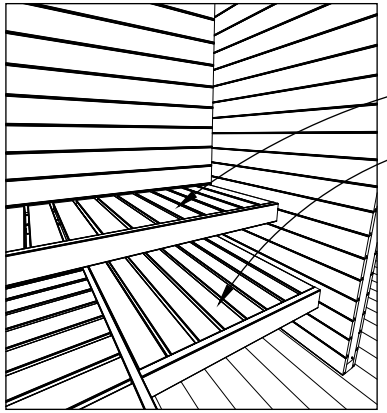

IV

DET 21b

DET 20b

2xDET 22

10 x H

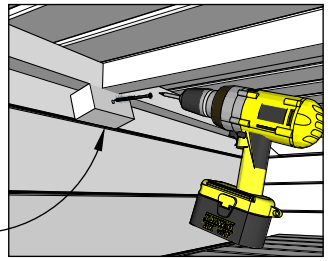

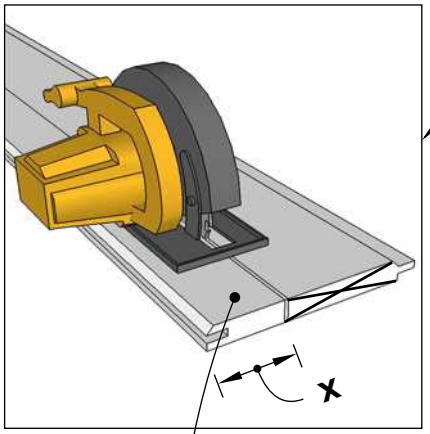

2 x DET 18c - cut to size!

6 x DET 18c

44 x DET 18b

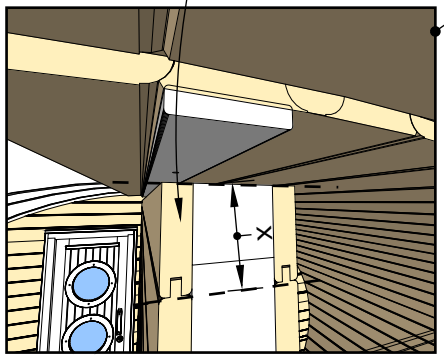

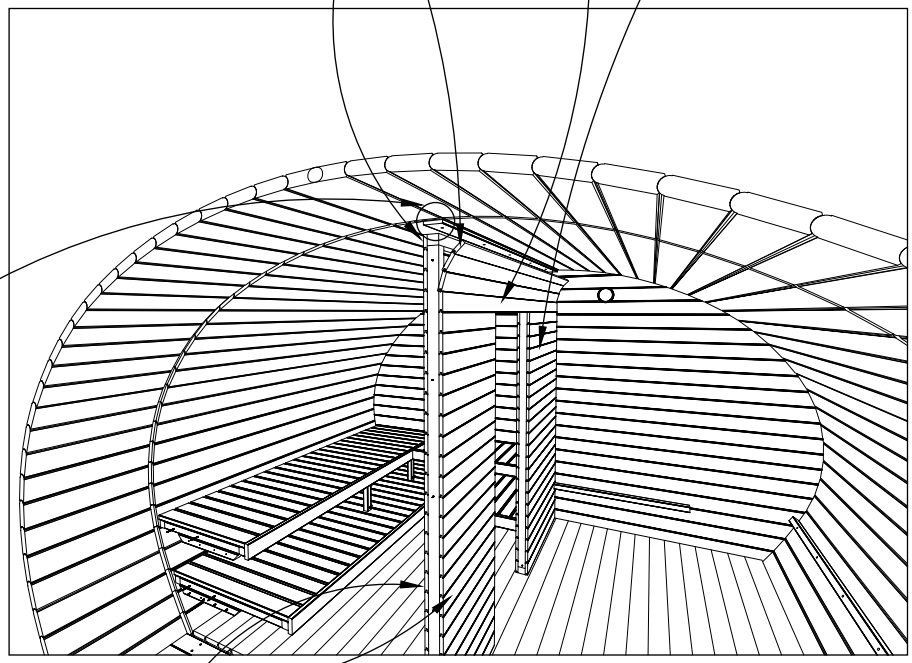

44 x DET 18a

I

8 x H

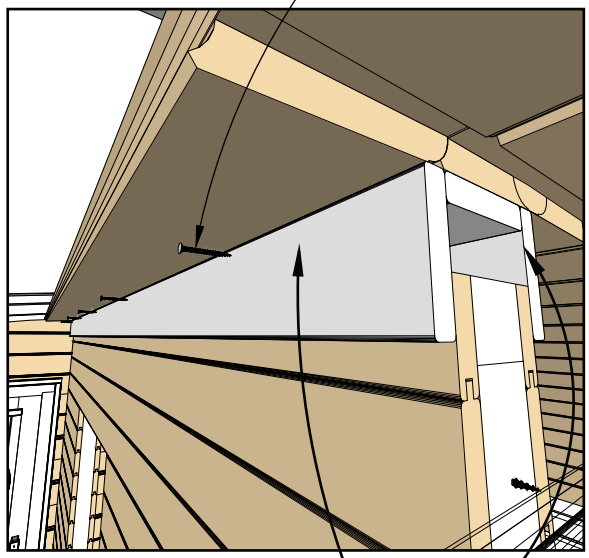

II

2 x DET 16

FRODO 300

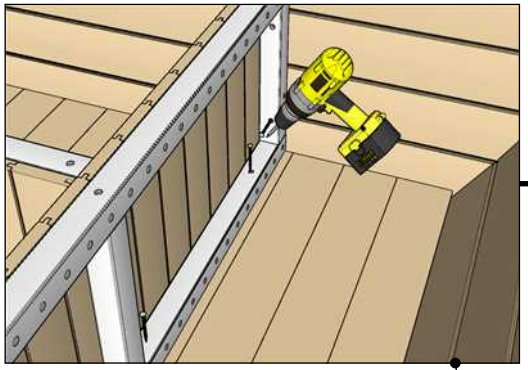

II

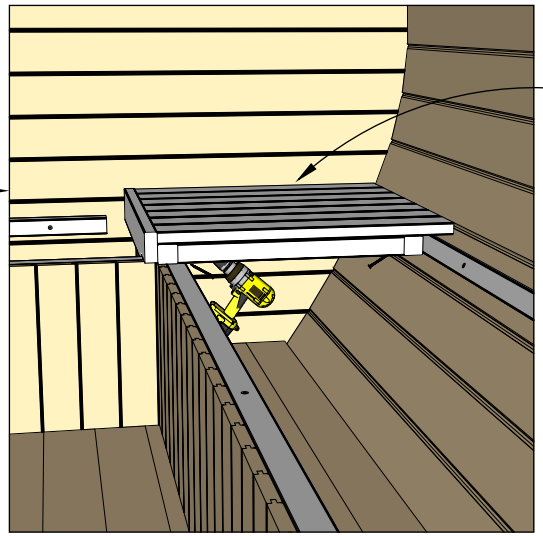

III

8 x H

DET 26a

8 x H

DET 27

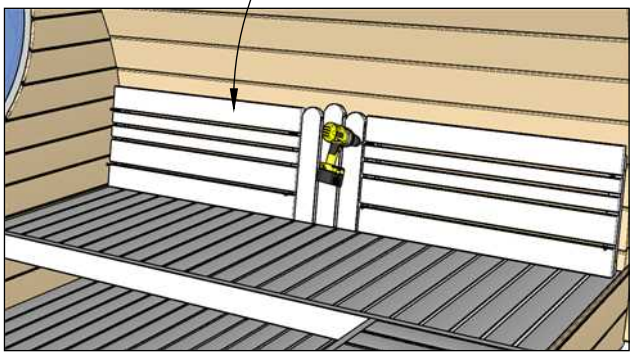

5 x H

DET 24a

8 x H

DET 25a

422

422

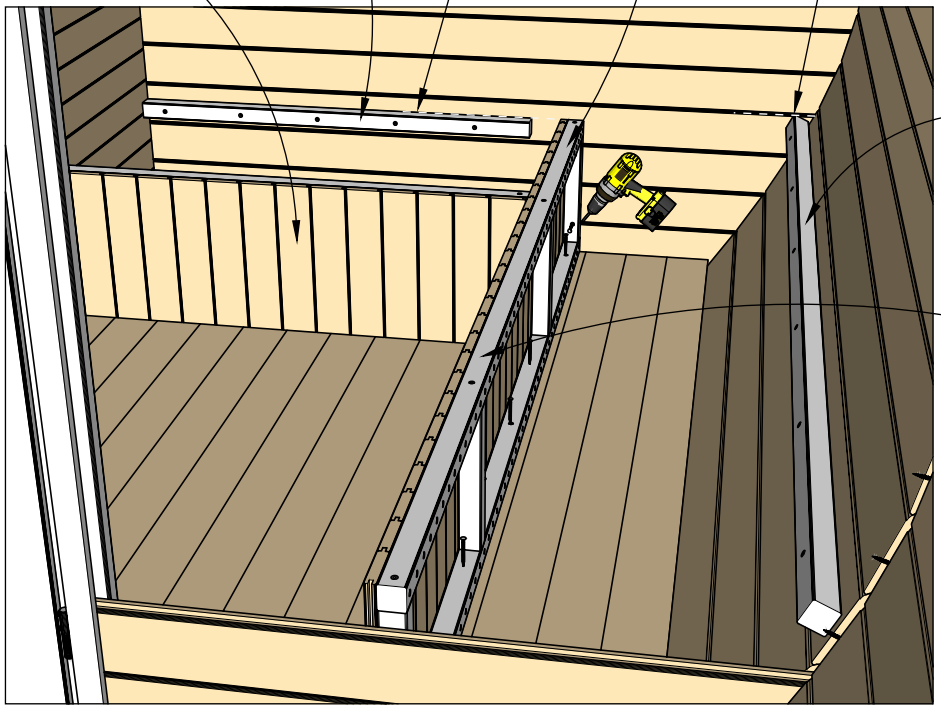

I

6 x H

DET 24b

DET 25b

10 x H

DET 26b

2xDET 26c

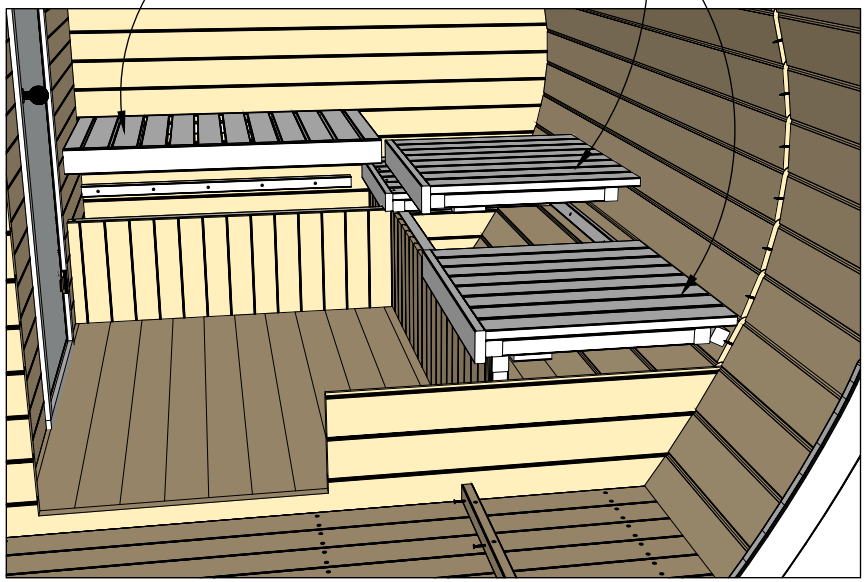

IV

FRODO 300

2xDET 30a

4 x J

2x DET 29

4 x J

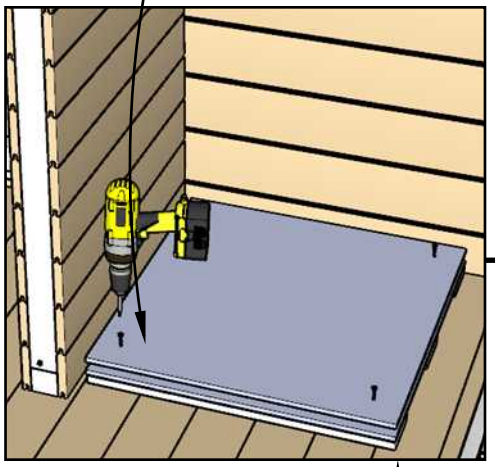

II

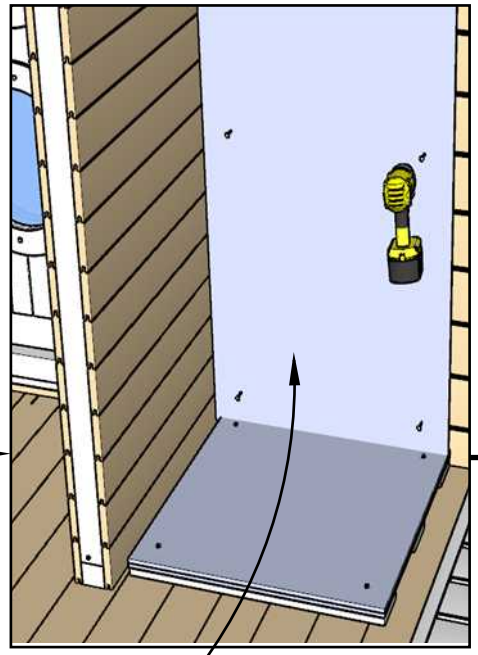

DET 30b

7 x J

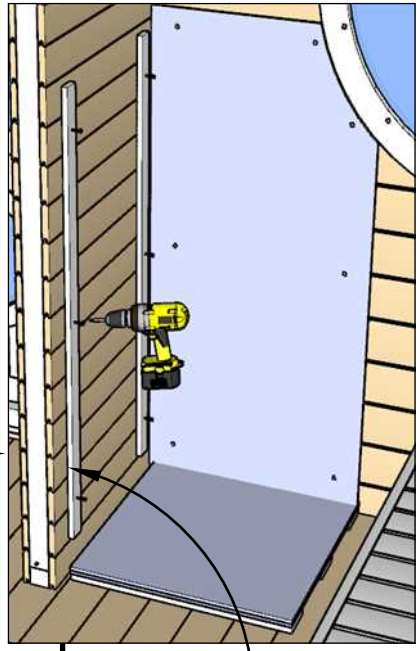

2x DET 29

4 x J

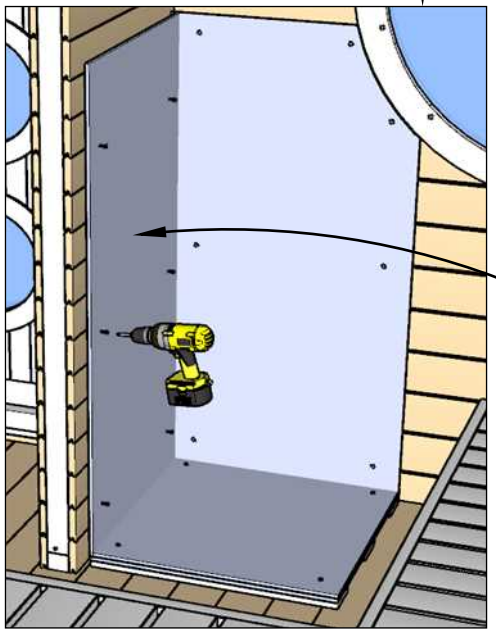

DET 30b

6 x J

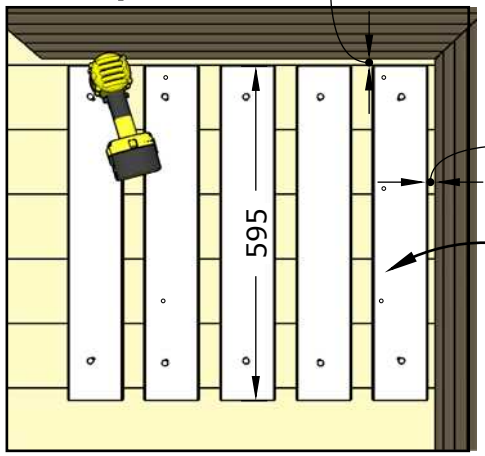

5x DET 28

10 x J

I

13.

(FR101)

FRODO 300

Use waterlevel

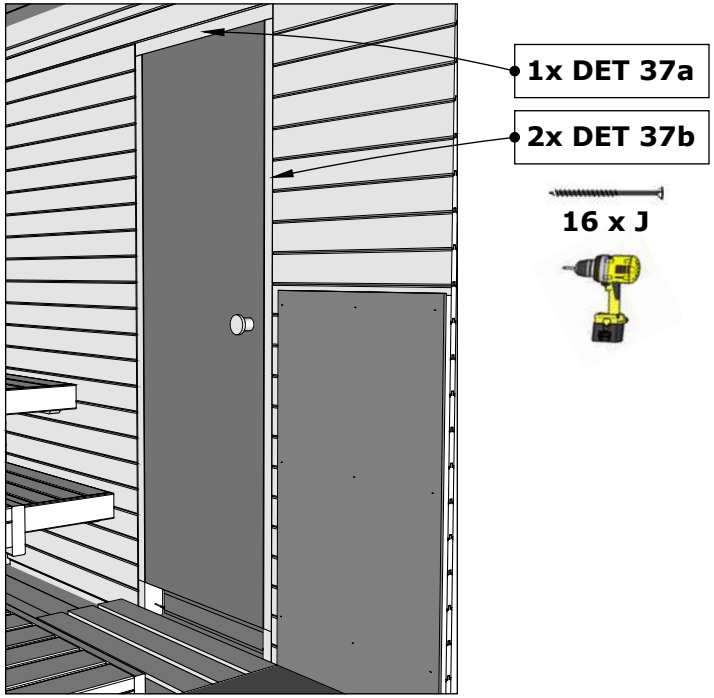

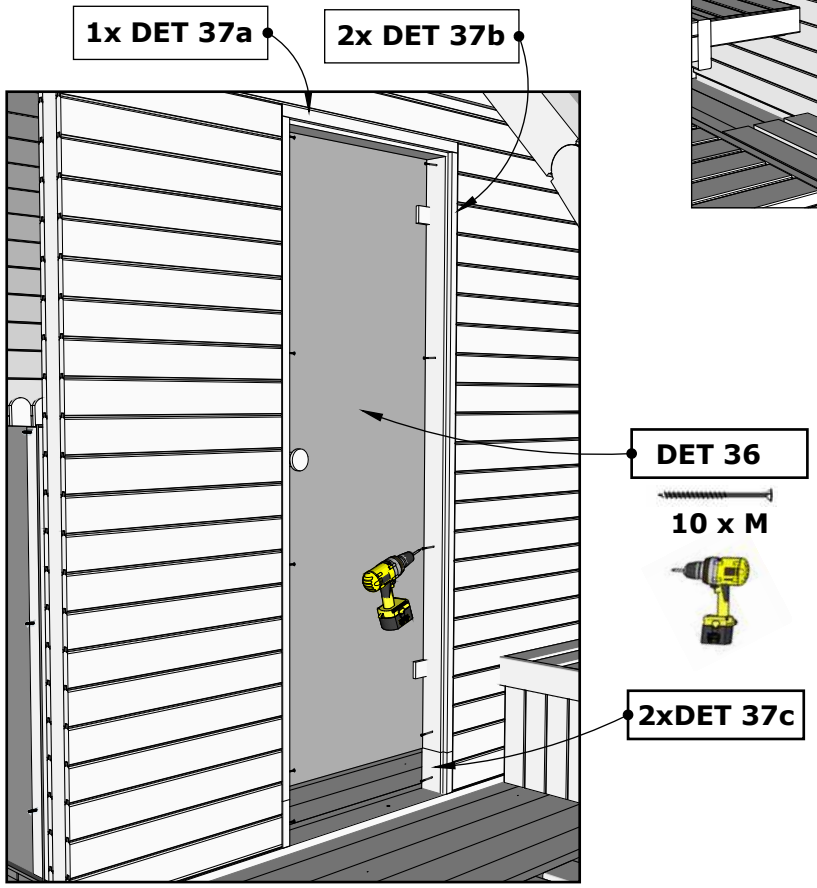

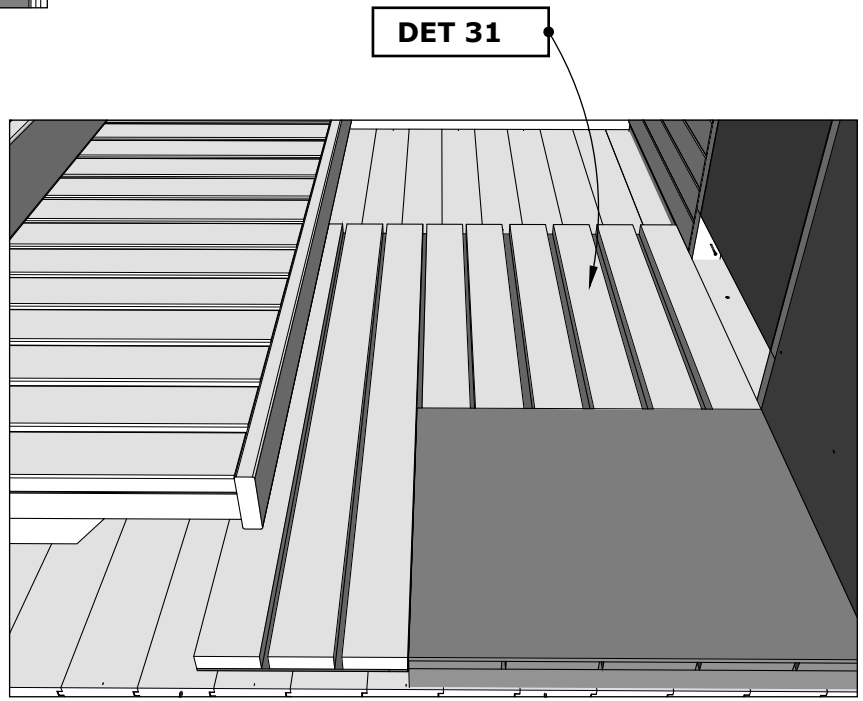

FRODO 300

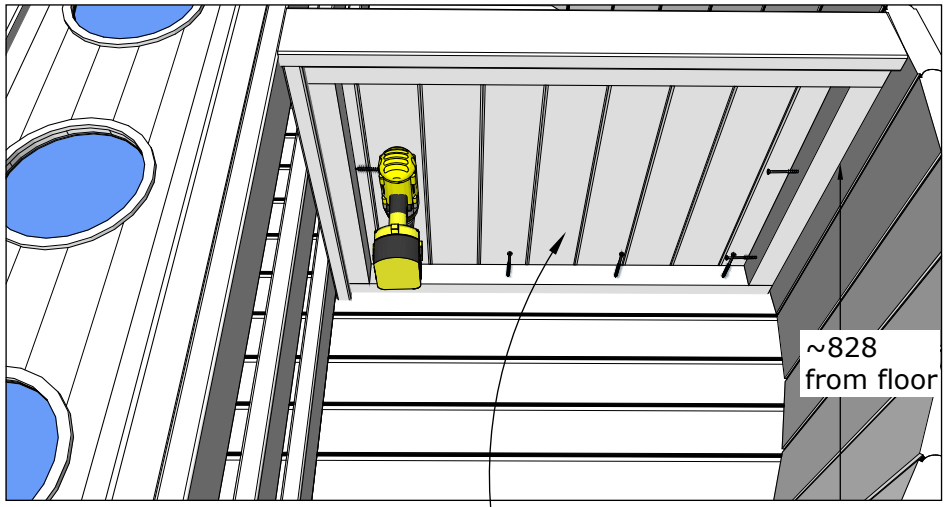

II

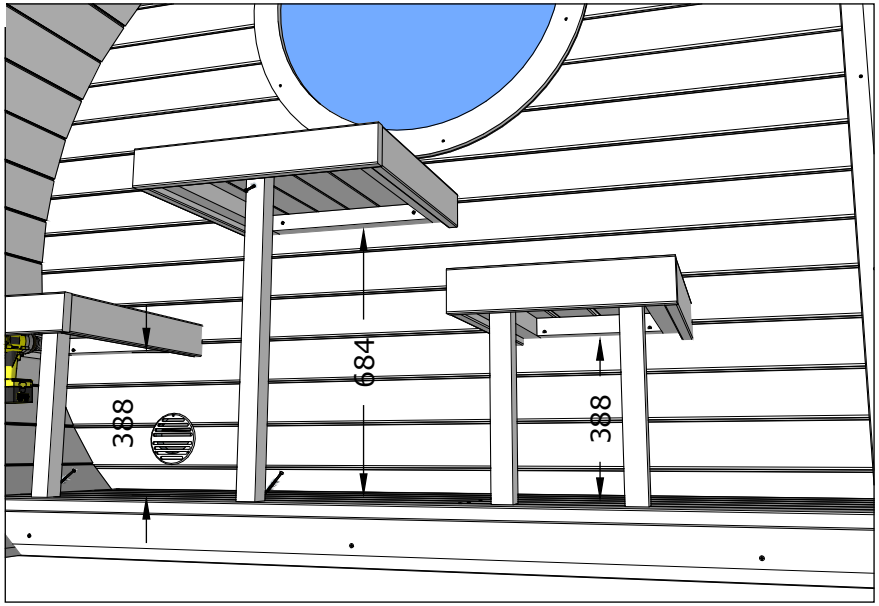

III

DET 32c

10 x H

8 x H

DET 33a

DET 33b

DET 33c

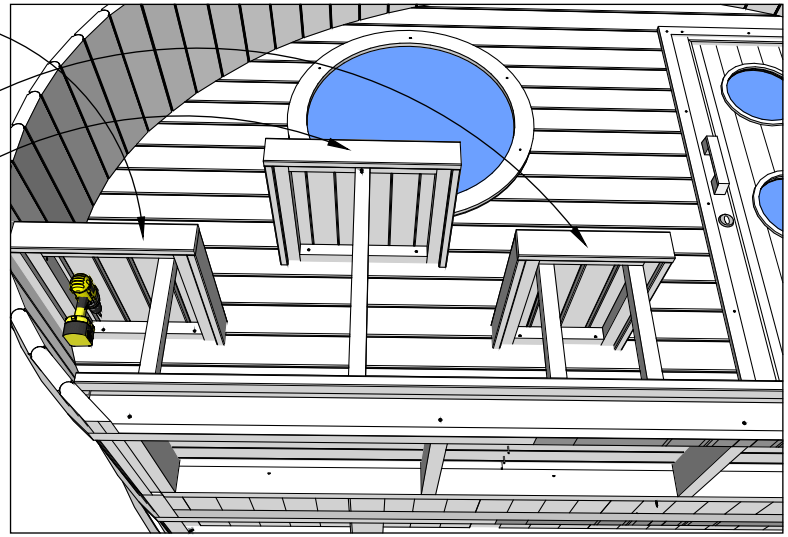

IV

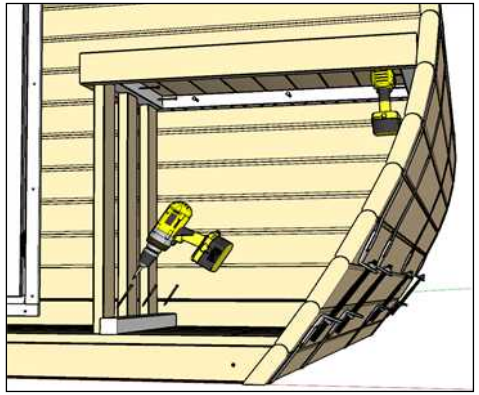

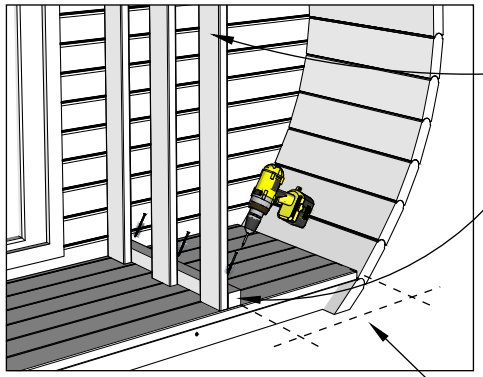

3x DET 32b

DET 32a

3 x H

I

~470

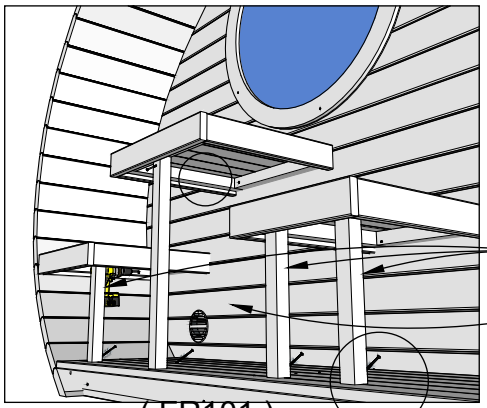

3x DET 34a

DET 34b

8 x H

(FR101)

FRODO 300

NB! Check also shingles installation manual inside shingles package.

DET P

NB! Before roof shingles, install underlay felt. Check underlay felt installation manual on extra pages.

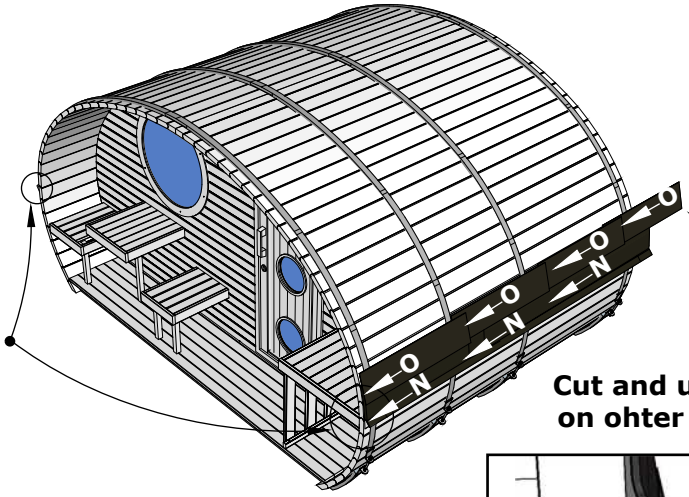

Cut and use it on ohter side

DET N
DET O

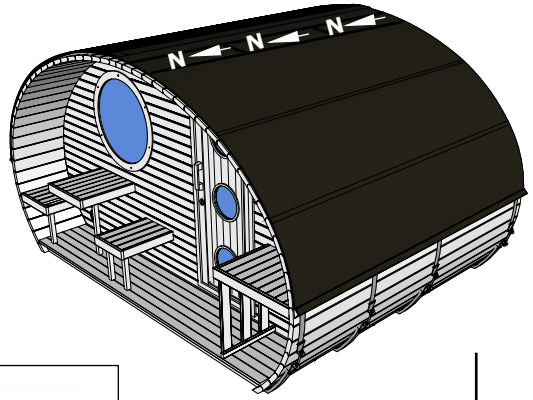

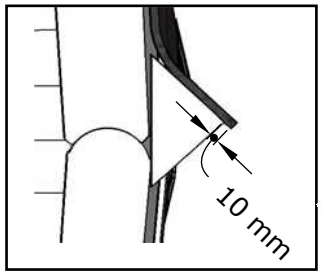

22 x H

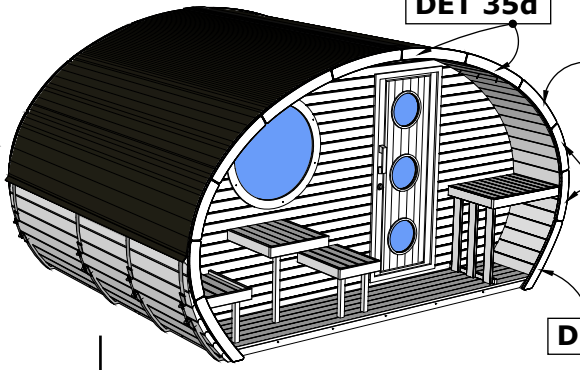

22 x H

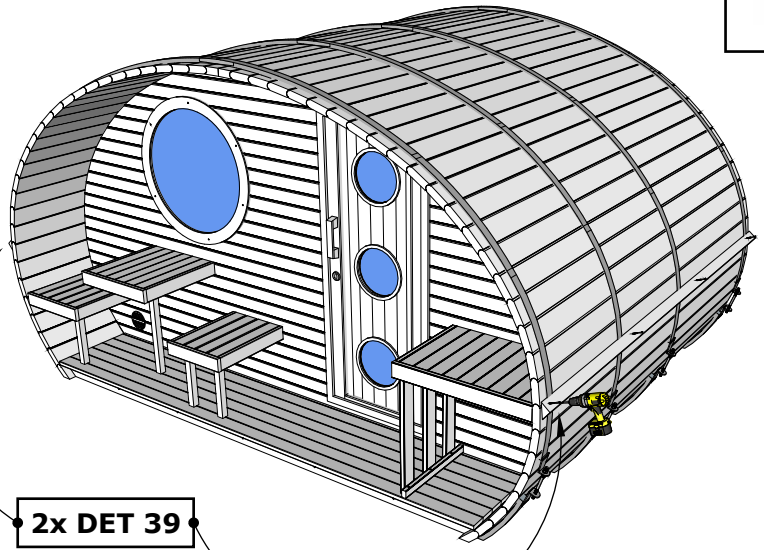

2x DET 39

8 x H

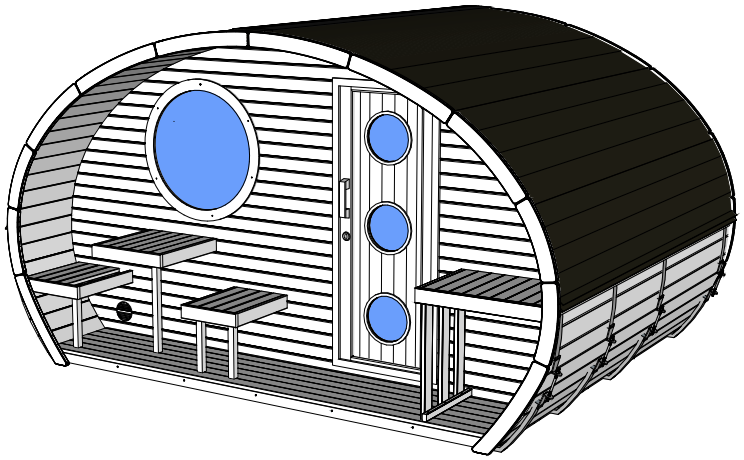

Self-adhesive
UNDERLAY FELT
INSTALLATION MANUAL.

Check also underlay felt installation manual inside the package.

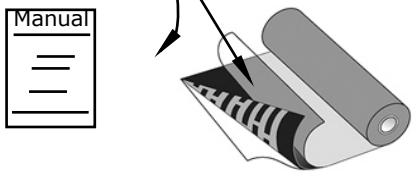

The temperature during installation should be a minimum of +10°C. In colder conditions, a hot air gun should be used.
Hot bitumen or torching must not be used when installing the felt.

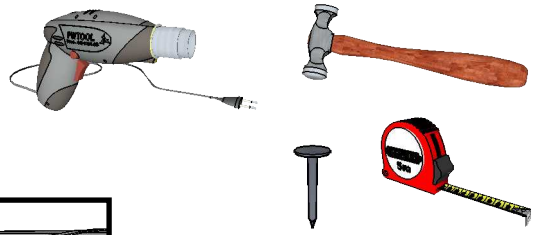

Use clout nails only on bitumen side.

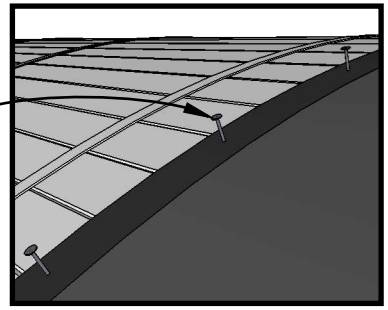

Start from backside!

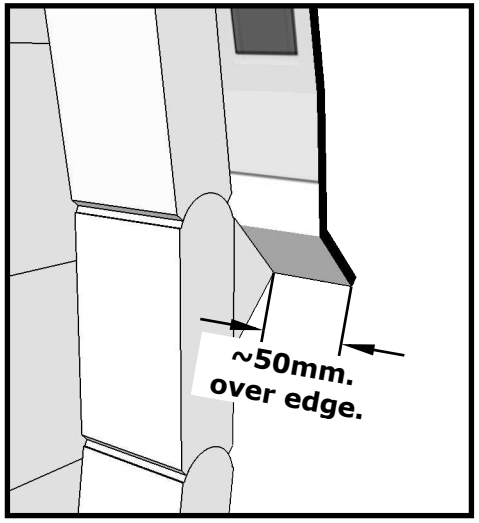

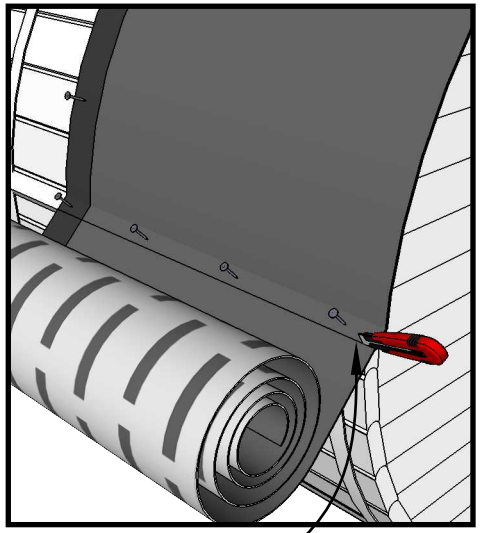

Cut off

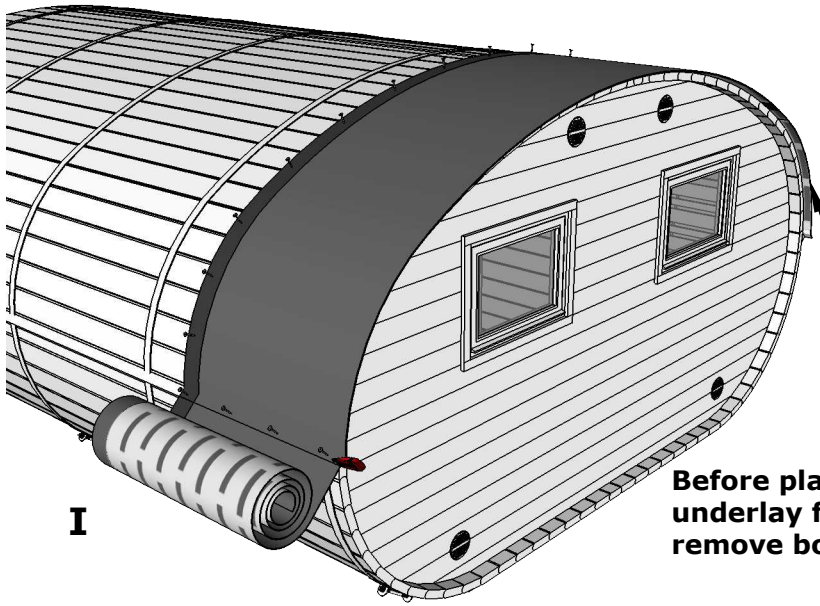

Before placing underlay felt, remove bottom film.

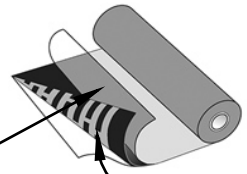

Place side with stripes against the wood.

1.

(FR101)

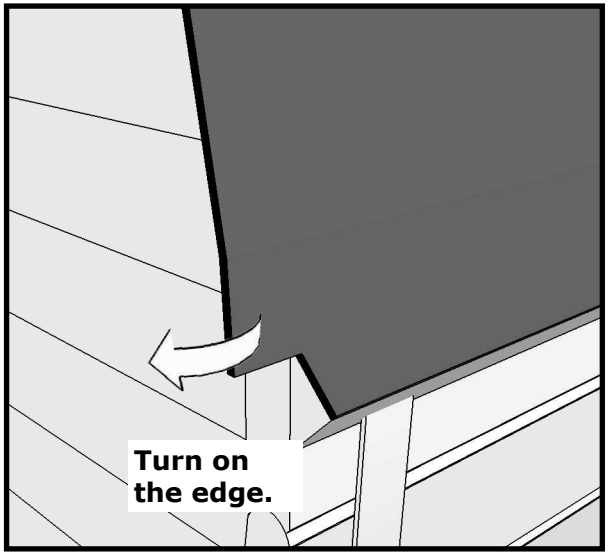
Turn on
the edge.

I

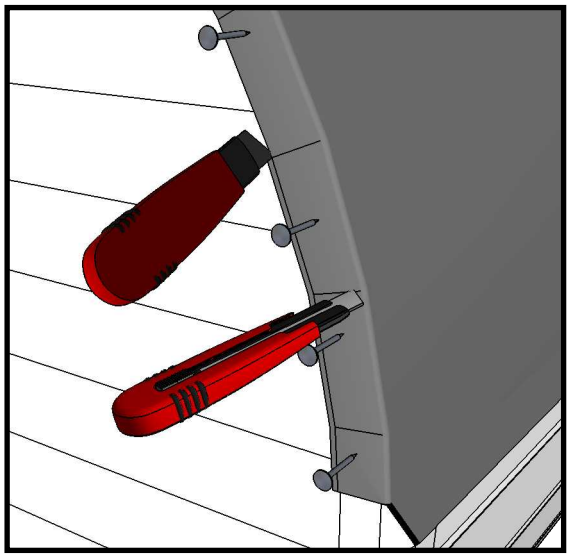

II

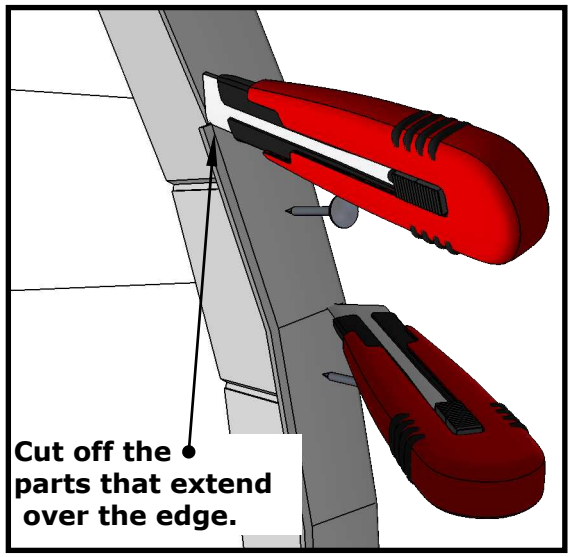
Cut off the
parts that extend
over the edge.

III

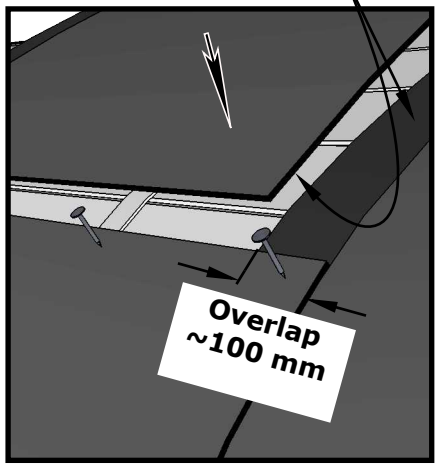
Use hot air gun,
if necessary.
Overlap
~100 mm

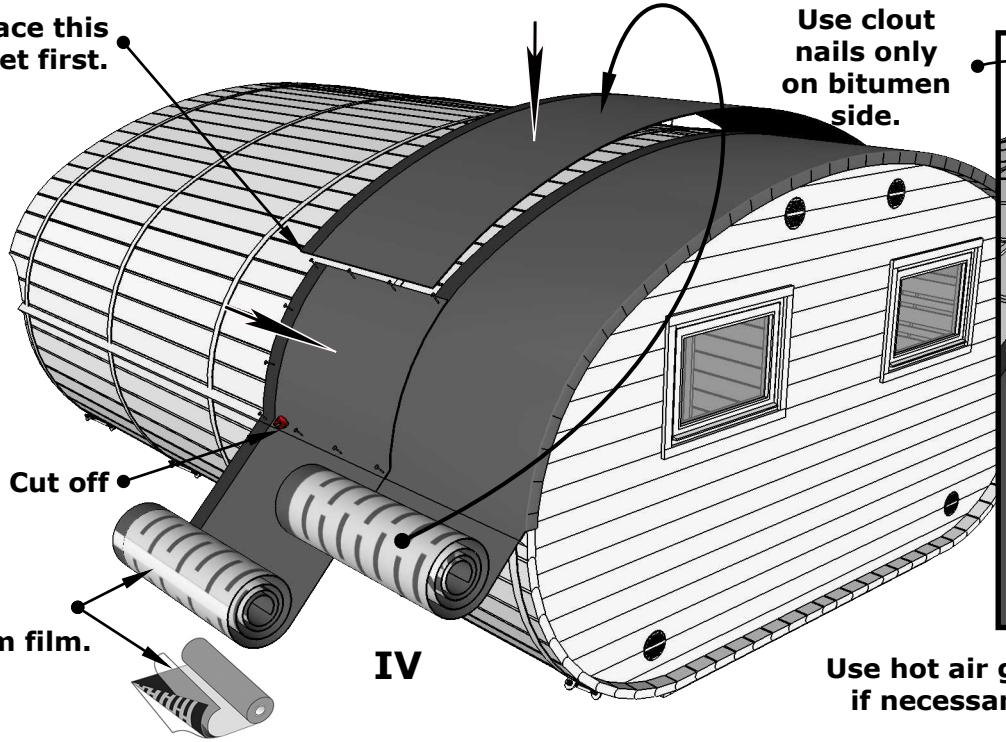
Place this
sheet first.
Use clout
nails only
on bitumen
side.
Cut off
Before placing
underlay felt,
remove bottom film.

IV

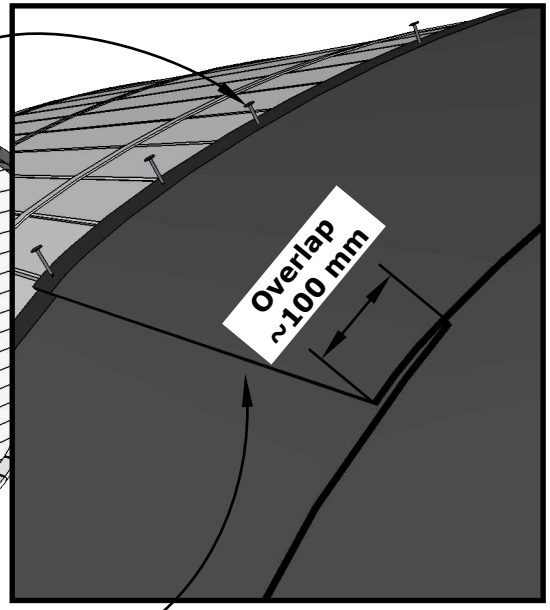
Overlap
~100 mm
Use hot air gun,
if necessary.

2.

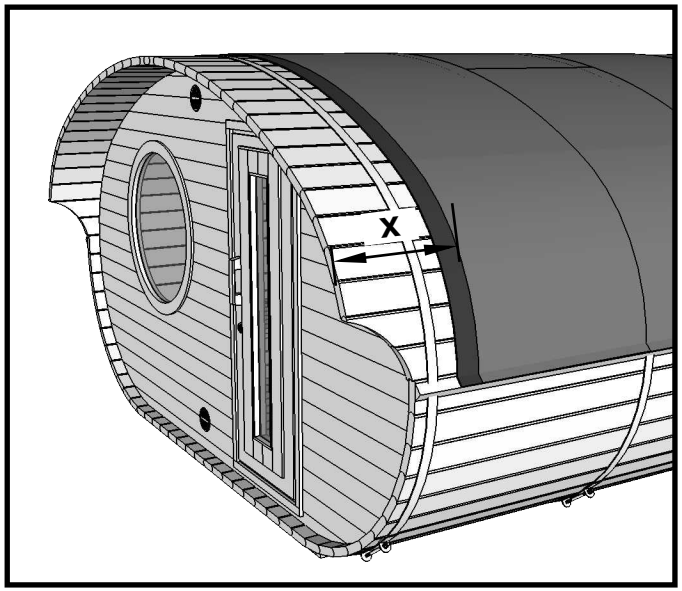

I

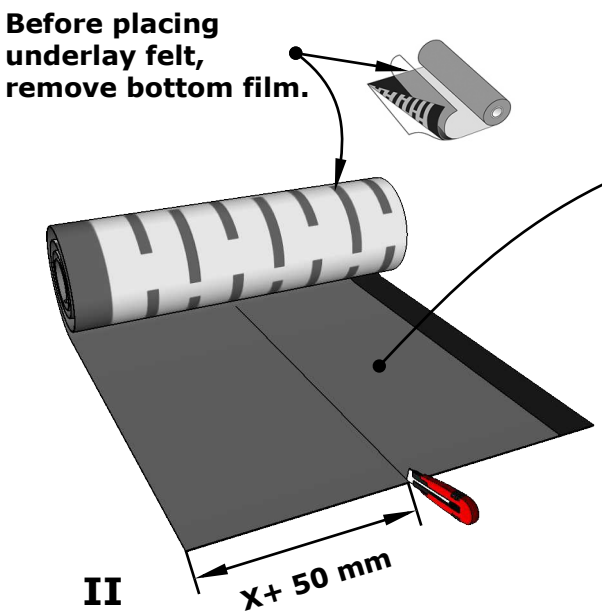

II

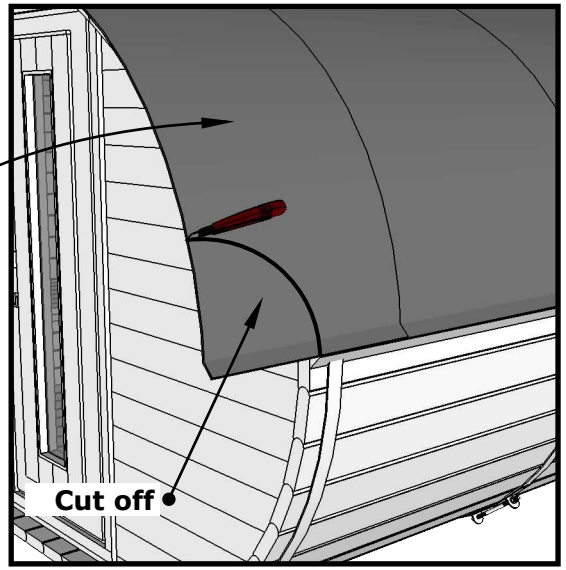

III

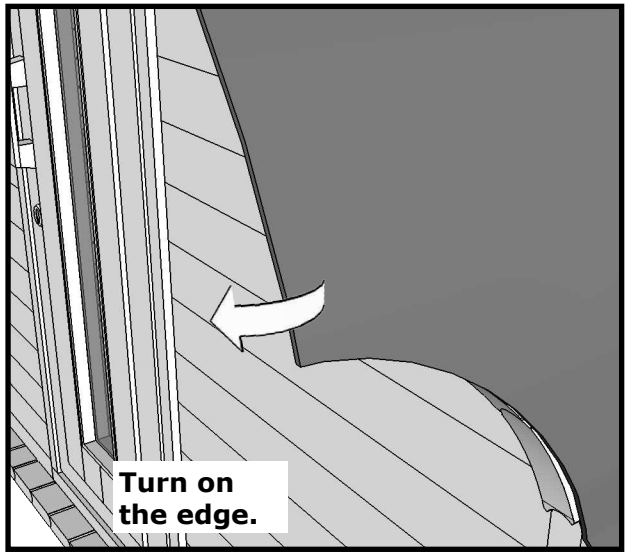

IV

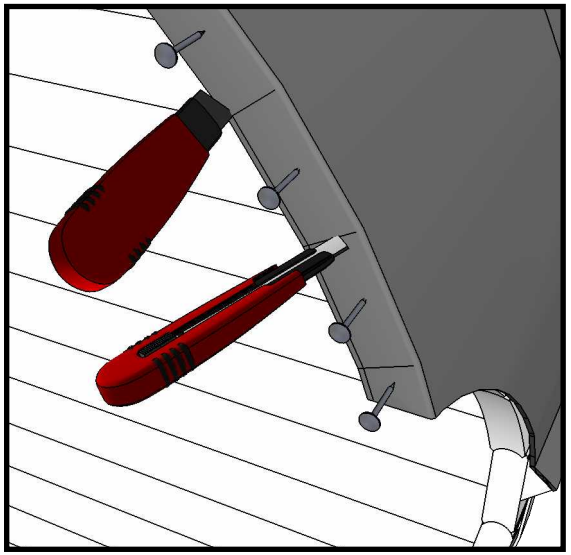

V

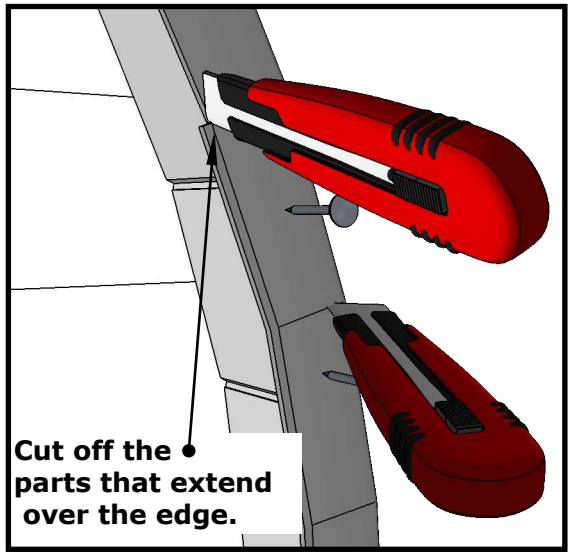

VI

Continue with roof shingles.

3.